ALC250

TWO CHANNEL AC'97 2.3 AUDIO CODEC with EQUALIZER

DATA SHEET

Rev. 1.01
06 August 2003

Realtek Semiconductor Corp.
No. 2, Industry E. Rd. IX, Science-Based Industrial Park, Hsinchu 300, Taiwan
Tel: +886-3-5780211 Fax: +886-3-5776047
www.realtek.com.tw

Tel: +49(0)234-9351135 · Fax: +49(0)234-9351137 EMAIL: info@cornelius-consult.de http://www.cornelius-consult.de

COPYRIGHT

©2003 Realtek Semiconductor Corp. All rights reserved. No part of this document may be reproduced, transmitted, transcribed, stored in a retrieval system, or translated into any language in any form or by any means without the written permission of Realtek Semiconductor Corp.

DISCLAIMER

Realtek provides this document "as is", without warranty of any kind, neither expressed nor implied, including, but not limited to, the particular purpose. Realtek may make improvements and/or changes in this document or in the product described in this document at any time. This document could include technical inaccuracies or typographical errors.

TRADEMARKS

Realtek is a trademark of Realtek Semiconductor Corporation. Other names mentioned in this document are trademarks/registered trademarks of their respective owners.

CONFIDENTIALITY

This document is confidential and should not be provided to a third-party without the permission of Realtek Semiconductor Corporation.

USING THIS DOCUMENT

This document is intended for the software engineer's reference and provides detailed programming information.

Though every effort has been made to ensure that this document is current and accurate, more information may have become available subsequent to the production of this guide. In that event, please contact your Realtek representative for additional information that may help in the development process.

REVISION HISTORY

Revision	Release Date	Summary
1.00	2003/07/31	First release.
1.01	2003/08/06	Change cover page.

Tel: +49(0)234-9351135 · Fax: +49(0)234-9351137 EMAIL: info@cornelius-consult.de http://www.cornelius-consult.de

Table of Contents

1. Features **1**
2. General Description **1**
3. Block Diagram **2**
3.1 Analog Mixer 2
3.2 Digital Data Path 3
4. Pin Assignments **4**
5. Pin Description **5**
5.1 Digital I/O Pins 5
5.2 Analog I/O Pins 5
5.3 Filter/Reference/NC 6
5.4 Power/Ground 6
6. Registers **7**
6.1 Mixer Registers 7
6.1.2 MX02 Master Volume 8
6.1.3 MX04 Headphone 8
6.1.4 MX06 MONO_OUT Volume 9
6.1.5 MX0A PC BEEP Volume 9
6.1.6 MX0C PHONE Volume 9
6.1.7 MX0E MIC Volume 10
6.1.8 MX10 LINE_IN Volume 10
6.1.9 MX12 CD Volume 10
6.1.10 MX16 AUX Volume 11
6.1.11 MX18 PCM_OUT Volume 11
6.1.12 MX1A Record Select 11
6.1.13 MX1C Record Gain for Stereo ADC 12
6.1.14 MX1E Record Gain for MIC ADC 12
6.1.15 MX20 General Purpose Register 12
6.1.16 MX22 3D Control 13
6.1.17 MX24 Audio interrupt and Paging 13
6.1.18 MX26 Powerdown Control/Status 14
6.1.19 MX28 Extended Audio ID 15
6.1.20 MX2A Extended Audio Status and Control 15
6.1.21 MX2C PCM DAC Rate 16
6.1.22 MX32 PCM ADC Rate 16
6.1.23 MX3A S/PDIF Out Channel Status/Control 16
6.2 Vendor Defined Registers (Page ID-00h) 18
6.2.1 MX60 S/PDIF Input Channel Status [15:0] 18
6.2.2 MX62 S/PDIF Input Channel Status [29:15] 18
6.2.3 MX64 EQualizer Control Index Port 18
6.2.4 MX64 EQualizer Control Data Port 18
6.2.5 MX6A Data Flow Control 19
6.3 Discovery Descriptor (Page ID-01h) 20
6.3.1 MX62 PCI Sub System ID 20
6.3.2 MX64 PCI Sub Vendor ID 20
6.3.3 MX66 Sense Function Select 20
6.3.4 MX68 Sense Function Information 20
6.3.5 MX6A Sense Detail 21
6.4 Extension Registers 22
6.4.1 MX76 GPIO & Interrupt Setup 22
6.4.2 MX78 GPIO & Interrupt Status 22
6.4.3 MX7A Miscellaneous Control 23
6.4.4 MX7C Vendor ID1 23
6.4.5 MX7E Vendor ID2 23
6.5 EQualizer Control Registers 24
7. Electrical Characteristics **28**

Tel: +49(0)234-9351135 · Fax: +49(0)234-9351137 EMAIL: info@cornelius-consult.de http://www.cornelius-consult.de

7.1 DC Characteristics 28
7.1.1 Absolute Maximum Ratings 28
7.1.2 Threshold Hold Voltage 28
7.1.3 Digital Filter Characteristics 28
7.1.4 S/PDIF output Characteristics 28
7.2 AC Timing Characteristics 29
7.2.1 Cold Reset 29
7.2.2 Warm Reset 29
7.2.3 AC-Link Clocks 29
7.2.4 Data Output and Input Timing 30
7.2.5 Signal Rise and Fall Timing 30
7.2.6 AC-Link Low Power Mode Timing 31
7.2.7 ATE Test Mode 31
7.2.8 AC-Link IO Pin Capacitance and Loading 31
7.2.9 SPDIF Output 32
8. Analog Performance Characteristics 33
9. Design Suggestions 35
9.1 Clocking 35
Low 35
0 (Primary) 35
9.2 AC-Link 35
9.3 Reset 35
9.4 CD Input 36
9.5 Odd Addressed Register Access 36
9.6 Power-down Mode 36
9.7 Test Mode 36
9.7.1 ATE In Circuit Test Mode 36
9.7.2 Vendor Specific Test Mode 36
9.8 DC Voltage Volume Control 37
9.9 POWER OFF CD Function 38
10. Application Circuit 39
11. Mechanical Dimensions 41
11. Mechanical Dimensions 41

Tel: +49(0)234-9351135 · Fax: +49(0)234-9351137 EMAIL: info@cornelius-consult.de http://www.cornelius-consult.de

1. Features

- **Built- in 7 Bands of Digital Hardware Equalizer for Optimizing Speaker Response**
- Single chip with high S/N ratio (>100 dB)
- Meets performance requirements for audio on PC99/2001 systems
- Meets Microsoft WHQL/WLP 2.0 audio requirements
- 20-bit DAC and 18-bit ADC resolution
- ***Compliant with AC'97 2.3 specifications***
  -LINE/HP-OUT, MIC-IN and LINE-IN sensing
  -14.318MHz-→24.576MHz PLL saves crystal
  -12.288MHz BITCLK input can be consumed
  -Integrated PCBEEP generator to save buzzer
  -Interrupt capability
  -Page registers and Analog Plug&Play
- Support of S/PDIF out is fully compliant with AC'97 rev2.3 specifications
- Three analog line-level stereo inputs with 5-bit volume control: LINE_IN, CD, AUX
- High quality differential CD input
- Two analog line-level mono input: PCBEEP, PHONE-IN
- Supports double sampling rate (96KHz) of DVD audio playback
- Two software selectable MIC inputs
- +6/12/20/30dB boost preamplifier for MIC input
- Stereo output with 6-bit volume control
- Mono output with 5-bit volume control
- Headphone output with 50mW/20Ω amplifier
- 3D Stereo Enhancement
- Multiple CODEC extension capability
- External Amplifier Power Down (EAPD) capability
- Power management and enhanced power saving features
- **Stereo MIC record for AEC/BF application**
- **DC Voltage volume control**
- Auxiliary power to support **Power Off CD**
- Adjustable VREFOUT control
- **EQ operation can be controlled by 2 pins of serial bus**
- **2 Universal Audio Jack (UAJ)® for front panel**
- Support 32K/44.1K/48K/96KHz of S/PDIF output
- Support 32K/44.1K/48KHz of S/PDIF input
- Power support: Digital: 3.3V; Analog: 3.3V/5V
- Standard 48-Pin LQFP Package
- **EAX™ 1.0&2.0 compatible**
- **Direct Sound 3D™ compatible**
- **A3D™ compatible**
- **I3DL2 compatible**
- **HRTF 3D Positional Audio**
- **Sensaura™ 3D Enhancement** (optional)
- **10 Bands of Software Equalizer**
- **Voice Cancellation and Key Shifting in Kara OK mode**
- **AVRack® Media Player**
- **Configuration Panel to improve Experience of User**

2. General Description

The ALC250 is a 20-bit DAC and 18-bit ADC full duplex AC'97 2.3 compatible stereo audio CODEC designed for PC multimedia systems, including host/soft audio and AMR/CNR based designs. The ALC250 incorporates proprietary converter technology to achieve a high SNR, greater than 100 dB, sensing logics for device reporting and Universal Audio Jack® to improve user interface. The ALC250 AC'97 CODEC supports multiple CODEC extensions with independent variable sampling rates and built-in 3D effects. The ALC250 CODEC provides two pairs of stereo outputs with independent volume controls, a mono output, and multiple stereo and mono inputs, along with flexible mixing, gain and mute functions to provide a complete integrated audio solution for PCs. The circuitry of the ALC250 CODEC operates from a +3.3V digital power and +5V analog power supply with EAPD (External Amplifier Power Down) control for use in notebook and PC applications. The ALC250 integrates a 50mW/20Ω headset audio amplifier into the CODEC, saving BOM costs. The ALC250 also supports the SPDIF out function, which is compliant to AC'97 2.3, which can offer easy connection of PCs to consumer electronic products, such as AC3 decoder/speaker and mini disk devices. The ALC250 CODEC supports host/soft audio from Intel ICHx chipsets as well as audio controller based VIA/SIS/ALI/AMD/nVIDIA/ ATI chipset. Bundled Windows series drivers (WinXP/ME/2000/98/NT), EAX/ Direct Sound 3D/ I3DL2/ A3D compatible sound effect utilities (supporting Karaoke, 26-kind of environment sound emulation, 10-band of software equalizer), HRTF 3D positional audio and Sensaura™ 3D (optional) provide an excellent entertainment package and game experience for PC users. Integrated 14.318M→24.576MHz PLL generate required clock to eliminate the need for external crystal. Besides, ALC250 also built in seven bands of digital hardware equalizer cascades one lowpass filter, five bandpass filters and one highpass filter. It is for optimizing frequency response of speaker on mobil PCs.

Tel: +49(0)234-9351135 · Fax: +49(0)234-9351137 EMAIL: info@cornelius-consult.de http://www.cornelius-consult.de

3. Block Diagram

3.1 Analog Mixer

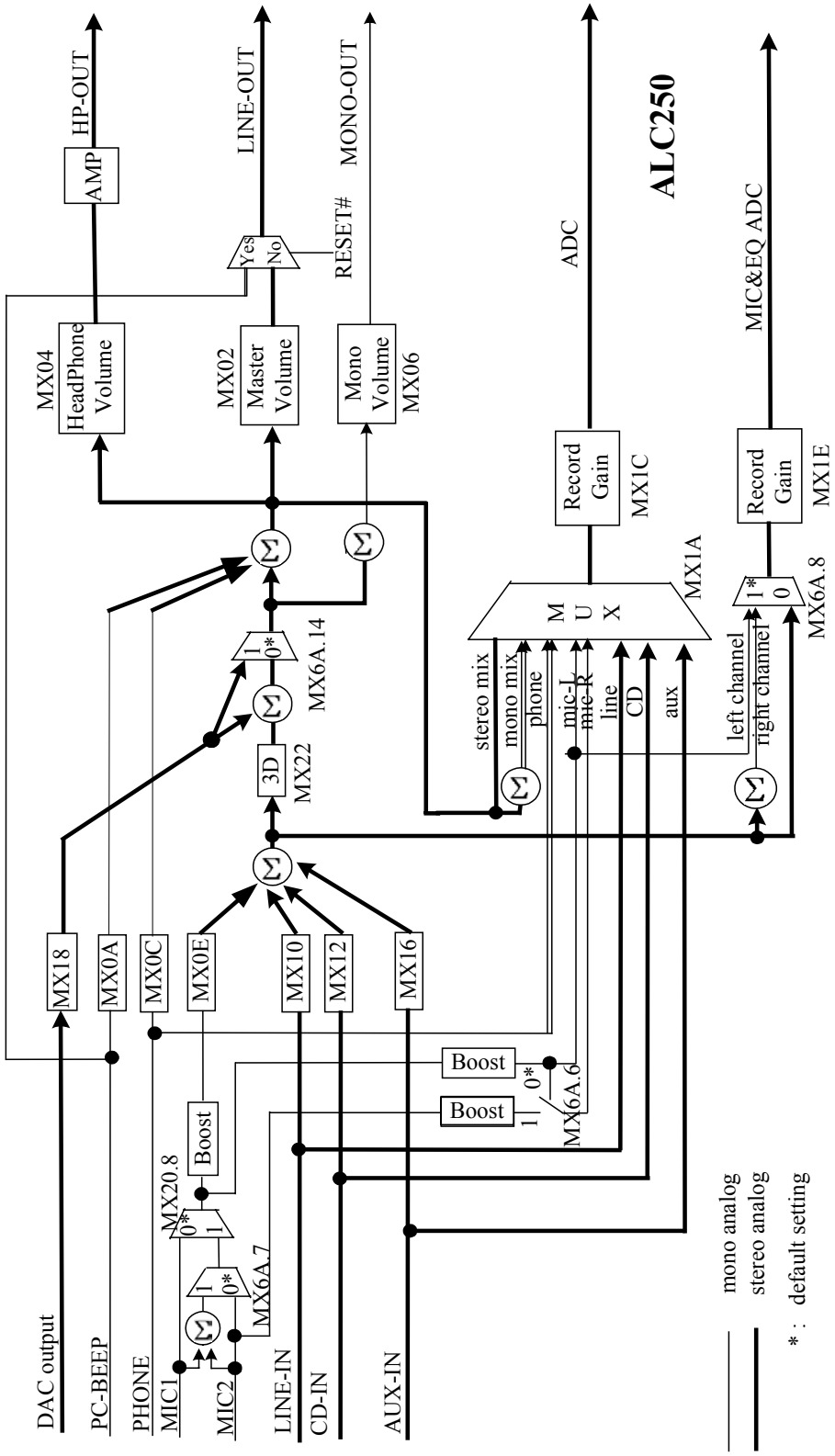

Figure. Analog Mixer Diagram

Tel: +49(0)234-9351135 · Fax: +49(0)234-9351137 EMAIL: info@cornelius-consult.de http://www.cornelius-consult.de

3.2 Digital Data Path

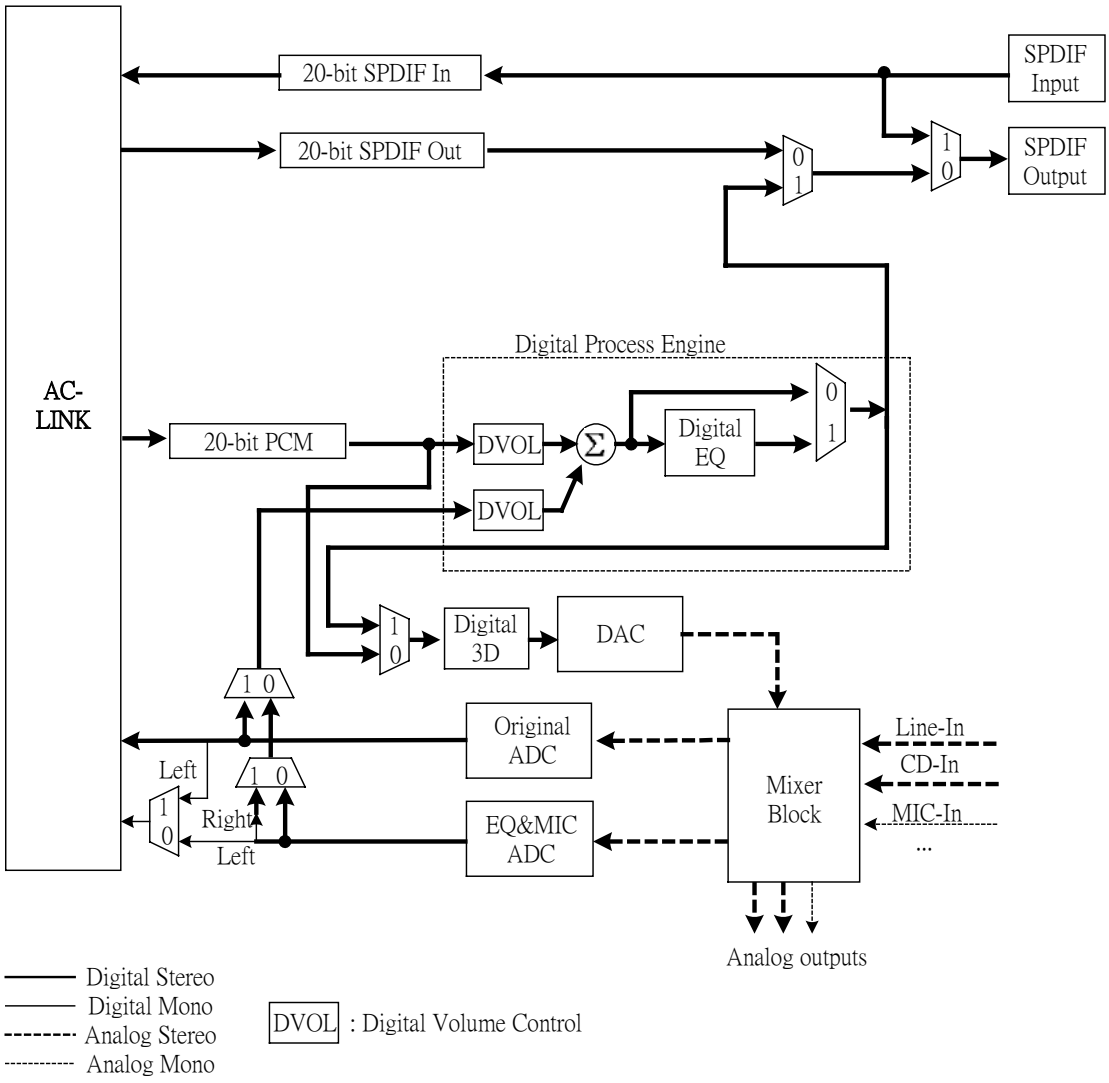

Figure. Digial Data Path Diagram

Tel: +49(0)234-9351135 · Fax: +49(0)234-9351137 EMAIL: info@cornelius-consult.de http://www.cornelius-consult.de

4. Pin Assignments

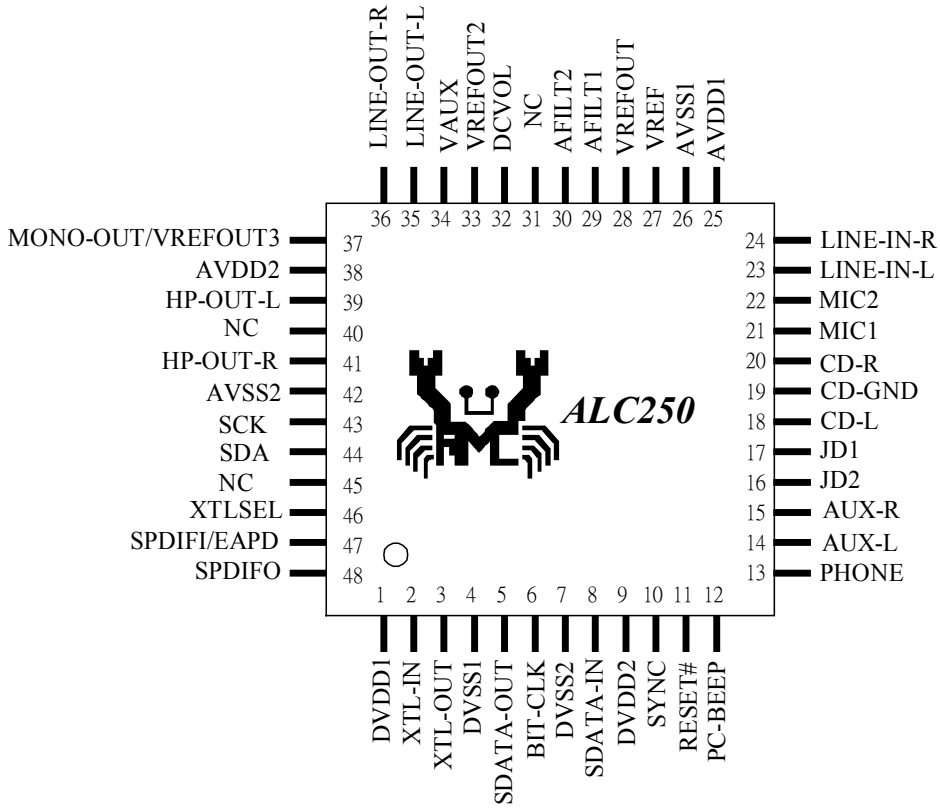

Tel: +49(0)234-9351135 · Fax: +49(0)234-9351137 EMAIL: info@cornelius-consult.de http://www.cornelius-consult.de

5. Pin Description

In order to reduce pin count, and therefore size and cost, some pins have multiple functions. In those cases, the functions are separated with a "/" symbol. Refer to the Pin Assignment diagram for a graphical representation.

5.1 Digital I/O Pins

Name	Type	Pin No	Description	Characteristic Definition
RESET#	I	11	AC'97 H/W reset	Schmitt trigger input
XTL-IN	I	2	Crystal input pad	Crystal: 24.576M/14.318M crystal input External: 24.576M/14.318M external clock input
XTL-OUT	O	3	Crystal output pad	Crystal: 24.576M/14.318M crystal output External: 24.576M/14.318M clock output
SYNC	I	10	Sample Sync (48KHz)	Schmitt trigger input
BIT-CLK	O	6	12.288MHz bit clock output	CMOS output
SDATA-OUT	I	5	Serial TDM input from AC'97 controller	CMOS input , Vt=1.65V
SDATA-IN	O	8	Serial TDM AC'97 Codec output	CMOS output
SCK	I	43	Serial bit clock input	Schmitt trigger input, V_{IL}=1.0V, V_{IH}=2.0V
SDA	IO	44	Serial data input/output	Schmitt trigger input, V_{IL}=1.0V, V_{IH}=2.0V
XELSEL	I	46	Pulled low to use external 14.318MHz clock source	CMOS input, Vt=0.35Vdd, internally pulled high by a 50K resistor.
SPDIFI/EAPD	I/O	47	S/PDIF input / External Amplifier power down control	CMOS input / output
SPDIFO	O	48	S/PDIF output	Digital output has 12 mA@75Ω driving capability.
				Total: 12 Pins

5.2 Analog I/O Pins

Name	Type	Pin No	Description	Characteristic Definition
PC-BEEP	I	12	PC speaker input	Analog input (1.6Vrms)
PHONE	I	13	Speakerphone input	Analog input (1.6Vrms)
AUX-L	IO	14	AUX Left channel	Analog input/output
AUX-R	IO	15	AUX Right channel	Analog input/output
JD2	I	16	Jack Detect pin-2	Internally pulled high to AVDD by a 50K resistor
JD1	I	17	Jack Detect pin-1	Internally pulled high to AVDD by a 50K resistor
CD-L	I	18	CD audio Left channel	Analog input (1.6Vrms)
CD-GND	I	19	CD audio analog GND	Analog input
CD-R	I	20	CD audio Right channel	Analog input (1.6Vrms)
MIC1	I	21	First MIC input	Analog input (1.6Vrms)
MIC2	I	22	Second MIC input	Analog input (1.6Vrms)
LINE-IN-L	I	23	Line input Left channel	Analog input (1.6Vrms)
LINE-IN-R	I	24	Line input Right channel	Analog input (1.6Vrms)
LINE-OUT-L	O	35	Line-Out Left channel	Analog output w/o amplifier
LINE-OUT-R	O	36	Line-Out Right channel	Analog output w/o amplifier
HP-OUT-L	IO	39	Headphone Out Left channel	ALC250: Analog output with amplifier / Analog input
HP-OUT-R	IO	41	Headphone Out Left channel	ALC250: Analog output with amplifier / Analog input
MONO-OUT/ VREFOUT3	O	37	Mono output / Third reference voltage	Analog output / Voltage output (2.5V/4.0V)
				Total: 18 Pins

Tel: +49(0)234-9351135 · Fax: +49(0)234-9351137 EMAIL: info@cornelius-consult.de http://www.cornelius-consult.de

5.3 Filter/Reference/NC

Name	Type	Pin No	Description	Characteristic Definition
VREF	-	27	Reference voltage	1uf capacitor to analog ground
VREFOUT	O	28	Ref. voltage out	Analog DC voltage output (2.5V / 4.0V)
AFILT1	-	29	ADC anti-aliasing filter	1000pf capacitor to analog ground.
AFILT2	-	30	ADC anti-aliasing filter	1000pf capacitor to analog ground.
NC	-	31	Not Connection	
DC VOL	I	32	DC Voltage Volume Control	Analog Input (AGND~AVDD)
VREFOUT2	O	33	Secondary Ref. voltage out	Analog DC voltage output (2.5V / 4.0V)
VREFOUT3	O	37	Third Ref. voltage out	Analog DC voltage output (2.5V / 4.0V)
VAUX	I	34	Auxiliary Power to keep CD and amplifier turned on.	+5V analog stand-by power
NC	-	40	Not Connection	
NC	-	45	Not Connection	
				Total: 11 Pins

5.4 Power/Ground

Name	Type	Pin No	Description	Characteristic Definition
AVDD1	I	25	Analog VDD (5.0V or 3.3V)	
AVDD2	I	38	Analog VDD (5.0V or 3.3V)	
AVSS1	I	26	Analog GND	
AVSS2	I	42	Analog GND	
DVDD1	I	1	Digital VDD (3.3V)	
DVDD2	I	9	Digital VDD (3.3V)	
DVSS1	I	4	Digital GND	
DVSS2	I	7	Digital GND	
				Total: 8 Pins

Tel: +49(0)234-9351135 · Fax: +49(0)234-9351137 EMAIL: info@cornelius-consult.de http://www.cornelius-consult.de

6. Registers

6.1 Mixer Registers

Access to registers with an odd number will return a 0. Reading unimplemented registers will also return a 0. X=Reserved bit.

REG. (HEX)	NAME	D15	D14	D13	D12	D11	D10	D9	D8	D7	D6	D5	D4	D3	D2	D1	D0	DEFAULT
00h	Reset	X	SE4	SE3	SE2	SE1	SE0	ID9	ID8	ID7	ID6	ID5	ID4	ID3	ID2	ID1	ID0	0190h
02h	Master Volume	Mute	X	ML5	ML4	ML3	ML2	ML1	ML0	RM*	X	MR5	MR4	MR3	MR2	MR1	MR0	8000h
04h	Headphone volume	Mute	X	HPL 5	HPL 4	HPL 3	HPL 2	HPL 1	HPL 0	RM*	X	HPR 5	HPR 4	HPR 3	HPR 2	HPR 1	HPR 0	8000h
06h	Mono-Out Volume	Mute	X	X	X	X	X	X	X	X	X	X	MM 4	MM 3	MM 2	MM 1	MM 0	8000h
0Ah	PC_BEEP Volume	Mute	X	X	F7	F6	F5	F4	F3	F2	F1	F0	PB3	PB2	PB1	PB0	X	8000h
0Ch	PHONE Volume	Mute	X	X	X	X	X	X	X	X	X	X	PH4	PH3	PH2	PH1	PH0	8008h
0Eh	MIC Volume	Mute	X	X	X	X	X	BGO 1	BGO 0	X	BC	X	MI4	MI3	MI2	MI1	MI0	8008h
10h	Line-In Volume	Mute	X	X	NL4	NL3	NL2	NL1	NL0	RM*	X	X	NR4	NR3	NR2	NR1	NR0	8808h
12h	CD Volume	Mute	X	X	CL4	CL3	CL2	CL1	CL0	RM*	X	X	CR4	CR3	CR2	CR1	CR0	8808h
16h	Aux Volume	Mute	X	X	AL4	AL3	AL2	AL1	AL0	RM*	X	X	AR4	AR3	AR2	AR1	AR0	8808h
18h	PCM Out Volume	Mute	X	X	PL4	PL3	PL2	PL1	PL0	RM*	X	X	PR4	PR3	PR2	PR1	PR0	8808h
1Ah	Record Select	X	X	X	X	X	LRS 2	LRS 1	LRS 0	X	X	X	X	X	RRS 2	RRS 1	RRS 0	0000h
1Ch	ADC Record Gain	Mute	X	X	X	LRG 3	LRG 2	LRG 1	LRG 0	X	X	X	X	RRG 3	RRG 2	RRG 1	RRG 0	8000h
1Eh	MIC ADC Record Gain	Mute	X	X	X	LM RG3	LM RG2	LM RG1	LM RG0	X	X	X	X	RM RG3	RM RG2	RM RG1	RM RG0	8000h
20h	General Purpose	POP	X	3D	X	DRS S1	DRS S0	MIX	MS	LBK	X	X	X	X	X	X	X	0400h
22h	3D Control	X	X	X	X	X	X	X	X	X	X	X	X	X	DP2	DP1	DP0	0000h
24h	Audio Int. & Paging	I4	I3	I2	I1	I0	X	X	X	X	X	X	X	PG3	PG2	PG1	PG0	0000h
26h	Power Down Ctrl/Status	EAP D	PR6	PR5	PR4	PR3	PR2	PR1	PR0	X	X	X	X	REF	ANL	DAC	ADC	000Fh
28h	Extended Audio ID	ID1	ID0	X	X	REV 1	REV 0	AM AP	X	X	X	X	X	X	SPD IF	DRA	VRA	0A07h
2Ah	Extended Audio Status	X	X	X	X	X	SPC V	X	X	X	X	SPS A1	SPS A0	X	SPD IF	DRA	VRA	0000h
2Ch	PCM front Out Sample Rate	FSR 15	FSR 14	FSR 13	FSR 12	FSR 11	FSR 10	FSR 9	FSR 8	FSR 7	FSR 6	FSR 5	FSR 4	FSR 3	FSR 2	FSR 1	FSR 0	BB80h
32h	PCM Input Sample Rate	ISR 15	ISR 14	ISR 13	ISR 12	ISR 11	ISR 10	ISR 9	ISR 8	ISR 7	ISR 6	ISR 5	ISR 4	ISR 3	ISR 2	ISR 1	ISR 0	BB80h
34h	MIC Input Sample Rate	MSR 15	MSR 14	MSR 13	MSR 12	MSR 11	MSR 10	MSR 9	MSR 8	MSR 7	MSR 6	MSR 5	MSR 4	MSR 3	MSR 2	MSR 1	MSR 0	BB80h
3Ah	S/PDIF Ctl	V	DRS	SPS R1	SPS R0	L	CC6	CC5	CC4	CC3	CC2	CC1	CC0	PRE	COP Y	/AU DIO	PRO	2000h
60h/ 6Eh	Vendor Define	0	0	0	0	0	0	0	0	0	0	0	0	0	0	0	0	0000h
76h	GPIO Setup	0	0	0	0	0	0	0	0	0	0	0	0	0	0	0	0	0000h
78h	GPIO Status	0	0	0	0	0	0	0	0	0	0	0	0	0	0	0	0	0000h
7Ch	Vendor ID1	F7	F6	F5	F4	F3	F2	F1	F0	S7	S6	S5	S4	S3	S2	S1	S0	414Ch
7Eh	Vendor ID2	T7	T6	T5	T4	T3	T2	T1	T0	DEV 7	DEV 6	DEV 5	DEV 4	DEV 3	DEV 2	DEV 1	DEV 0	4750h

Tel: +49(0)234-9351135 · Fax: +49(0)234-9351137 EMAIL: info@cornelius-consult.de http://www.cornelius-consult.de

6.1.1 MX00 Reset
Default: 0190h

Writing any value to this register will start a register reset, and causes all of the registers to revert to their default values, then the written data is ignored. Reading this register returns the ID code of the specific part.

Bit	Type	Function
15		**Reserved**
14:10	R	Return 00000b
9	R	Read as 0 (No support for 20-bit ADC)
8	R	Read as 1 (Support for 18-bit ADC)
7	R	Read as 1 (Support for 20-bit DAC)
6	R	Read as 0 (No support for 18-bit DAC)
5	R	Read as 0 (No support for Loudness)
4	R	Read as 1 (Headphone output support)
3	R	Read as 0 (No simulated stereo; for analog 3D block use)
2	R	Read as 0 (No Bass & Treble Control)
1	R	**Reserved,** Read as 0
0	R	Read as 0 (No dedicated MIC PCM input)

6.1.2 MX02 Master Volume
Default: 8000h

These registers control the overall volume level of the output functions. Each step on the left and right channels correspond to 1.5dB in increase/decrease in volume.

Bit	Type	Function
15	R/W	**Mute Control** 0: Normal 1: Mute (-∞ dB)
14		**Reserved**
13:8	R/W	**Master Left Volume** (MLV[5:0]) in 1.5 dB steps
7:6		**Reserved**
5:0	R/W	**Master Right Volume** (MRV[5:0]) in 1.5 dB steps

❶ For MRV/MLV: 00h 0 dB attenuation
3Fh 94.5 dB attenuation

6.1.3 MX04 Headphone
Default: 8000h

Register 04h controls the headphone (ALC250) output volume. Each step in bits 5:0 and 13:8 correspond to 1.5dB in increase/decrease in volume, allowing 63 levels of volume, from 000000 to 111111.

Bit	Type	Function
15	R/W	**Mute Control** 0: Normal 1: Mute (-∞ dB)
14		**Reserved**
13:8	R/W	**Headphone/True Line Output Left Volume** (HPL[5:0]) in 1.5 dB steps
7:6		**Reserved**
5:0	R/W	**Headphone/True Line Output Right Volume** (HPR[5:0]) in 1.5 dB steps

❶ For HPR/HPL: 00h 0 dB attenuation
3Fh 94.5 dB attenuation

Tel: +49(0)234-9351135 · Fax: +49(0)234-9351137 EMAIL: info@cornelius-consult.de http://www.cornelius-consult.de

6.1.4 MX06 MONO_OUT Volume
Default: 8000h

Register 06h controls the mono volume output. Mono output is the same data sent on all output channels. Each step in bits 4:0 correspond to 1.5dB in increase/decrease in volume, allowing 32 levels of volume from 00000 to 11111.

Bit	Type	Function
15	R/W	**Mute Control** 0: Normal 1: Mute (-∞ dB)
14:5		**Reserved**
4:0	R/W	**Mono Master Volume** (MMV[4:0]) in 1.5 dB steps

❶ For MMV: 00h 0 dB attenuation
1Fh 46.5 dB attenuation

6.1.5 MX0A PC BEEP Volume
Default: 8000h

This register controls the input volume for the PC beep signal. Each step in bits 4:1 correspond to a 3dB increase/decrease in volume. 16 levels of volume are available, from 0000 to 1111.

The purpose of this register is to allow the PC Beep signals to pass through the ALC250, eliminating the need for an external system speaker/buzzer. The PC BEEP pin is directly routed (internally hardwired) to the LINE-OUTL & R pins. If the PC speaker/buzzer is eliminated, it is recommended to connect the external speakers at all times so the POST codes can be heard during reset.

Bit	Type	Function
15	R/W	**Mute Control** 0: Normal 1: Mute (-∞ dB)
14:13		**Reserved**
12:5	R/W	**Internal PCBEEP Frequency, F[7:0]** The internal PCBEEP frequency is the result of dividing the 48KHz clock by 4 times the number specified in F[7:0]. The lowest tone is 48KHz/(255*4)=47Hz. The highest tone is 48KHz/(1*4)=12KHz. A value of 00h in F[7:0] disables internal PCBEEP generator and allows external PCBEEP input.
4:1	R/W	**PC Beep Volume** (PBV[3:0]) in 3 dB steps
0		**Reserved**

❶ For PBV: 00h 0 dB attenuation
0Fh 45 dB attenuation

6.1.6 MX0C PHONE Volume
Default: 8008h

Register 0Ch controls the telephone input volume for software modem applications. Because software modem applications may not have a speaker, the CODEC can offer a speaker-out service. Each step in bits 4:0 correspond to 1.5dB in increase/decrease in volume, allowing 32 levels of volume, from 00000 to 11111.

Bit	Type	Function
15	R/W	**Mute Control** 0: Normal 1: Mute (-∞ dB)
14:5		**Reserved**
4:0	R/W	**Phone Volume** (PV[4:0]) in 1.5 dB steps

❶ For PV: 00h +12 dB Gain
08h 0dB gain
1Fh -34.5dB Gain

Tel: +49(0)234-9351135 · Fax: +49(0)234-9351137 EMAIL: info@cornelius-consult.de http://www.cornelius-consult.de

6.1.7 MX0E MIC Volume
Default: 8008h

Register 0Eh controls the microphone input volume. Each step in bits 4:0 correspond to 1.5dB in increase/decrease in volume, allowing 32 levels of volume, from 00000 to 11111. Bit 6 enables/disables a boost in volume to a magnification based on bits 9:8.

Bit	Type	Function
15	R/W	**Mute Control** 0: Normal 1: Mute (-∞ dB)
14:10		**Reserved**
9:8	R/W	**Boost Gain Option** (BGO) 00: 20 dB 01: 6 dB 10: 12 dB 11: 29.5 dB (V=30*Vmic-in)
7		**Reserved**
6	R/W	**Boost Control** (BC) 0: Disable 1: Enable Boost
5		**Reserved**
4:0	R/W	**Mic Volume** (MV[4:0]) in 1.5 dB steps

❶ For MV: 00h +12 dB Gain
08h 0dB gain
1Fh -34.5dB Gain

❷ If 29.5dB boost gain is selected, input resistor can be reduced to save area of feedback resistor.

6.1.8 MX10 LINE_IN Volume
Default: 8808h

Register 10h controls the LINE_IN input volume. Each step in bits 4:0 correspond to 1.5dB in increase/decrease in volume for the right channel, allowing 32 levels of volume, from 00000 to 11111. Each step in bits 12:8 correspond to 1.5dB in increase/decrease in volume for the left channel, allowing 32 levels of volume, from 00000 to 11111.

Bit	Type	Function
15	R/W	**Mute Control** 0: Normal 1: Mute (-∞ dB)
14:13		**Reserved**
12:8	R/W	**Line-In Left Volume** (NLV[4:0]) in 1.5 dB steps
7:5		**Reserved**
4:0	R/W	**Line-In Right Volume** (NRV[4:0]) in 1.5 dB steps

❶ For NLV/NRV: 00h +12 dB Gain
08h 0dB gain
1Fh -34.5dB Gain

6.1.9 MX12 CD Volume
Default: 8808h

Register 12h controls the CD input volume. Each step in bits 4:0 correspond to 1.5dB in increase/decrease in volume for the right channel, allowing 32 levels of volume, from 00000 to 11111. Each step in bits 12:8 correspond to 1.5dB in increase/decrease in volume for the left channel, allowing 32 levels of volume, from 00000 to 11111.

Bit	Type	Function
15	R/W	**Mute Control** 0: Normal 1: Mute (-∞ dB)
14:13		**Reserved**
12:8	R/W	**CD Left Volume** (CLV[4:0]) in 1.5 dB steps
7:5		**Reserved**
4:0	R/W	**CD Right Volume** (CRV[4:0]) in 1.5 dB steps

❶ For CLV/CRV: 00h +12 dB Gain
08h 0dB gain
1Fh -34.5dB Gain

Tel: +49(0)234-9351135 · Fax: +49(0)234-9351137 EMAIL: info@cornelius-consult.de http://www.cornelius-consult.de

6.1.10 MX16 AUX Volume
Default: 8808h

Register 16h controls the auxiliary input volume. Each step in bits 4:0 correspond to 1.5dB in increase/decrease in volume for the right channel, allowing 32 levels of volume, from 00000 to 11111. Each step in bits 12:8 correspond to 1.5dB in increase/decrease in volume for the left channel, allowing 32 levels of volume, from 00000 to 11111.

Bit	Type	Function
15	R/W	**Mute Control** 0: Normal 1: Mute (-∞ dB)
14:13		**Reserved**
12:8	R/W	**AUX Left Volume** (ALV[4:0]) in 1.5 dB steps
7:5		**Reserved**
4:0	R/W	**AUX Right Volume** (ARV[4:0]) in 1.5 dB steps

❶ For ALV/ARV:
00h +12 dB Gain
08h 0dB gain
1Fh -34.5dB Gain

6.1.11 MX18 PCM_OUT Volume
Default: 8808h

Register 18h controls the PCM_OUT output volume. Each step in bits 4:0 correspond to 1.5dB in increase/decrease in volume for the right channel, allowing 32 levels of volume, from 00000 to 11111. Each step in bits 12:8 correspond to 1.5dB in increase/decrease in volume for the left channel, allowing 32 levels of volume, from 00000 to 11111.

Bit	Type	Function
15	R/W	**Mute Control** 0: Normal 1: Mute (-∞ dB)
14:13		**Reserved**
12:8	R/W	**PCM Volume** (PLV[4:0]) in 1.5 dB steps
7:5		**Reserved**
4:0	R/W	**PCM Right Volume** (PRV[4:0]) in 1.5 dB steps

❶ For PLV/PRV:
00h +12 dB Gain
08h 0dB gain
1Fh -34.5dB Gain

6.1.12 MX1A Record Select
Default: 0000h

Register 1Ah controls the record input volume. Each step in bits 2:0 correspond to 1.5dB in increase/decrease in volume for the right channel, allowing 7 levels of volume, from 000 to 111. Each step in bits 10:8 correspond to 1.5dB in increase/decrease in volume for the left channel, allowing 7 levels of volume, from 000 to 111.

Bit	Type	Function
15:11		**Reserved**
10:8	R/W	**Left Record Source Select** (LRS[2:0])
7:3		**Reserved**
2:0	R/W	**Right Record Source Select** (RRS[2:0])

❶ For LRS
0 MIC
1 CD LEFT
2 Muted
3 AUX LEFT
4 LINE LEFT
5 STEREO MIXER OUTPUT LEFT
6 MONO MIXER OUTPUT
7 PHONE

❷ For RRS

Tel: +49(0)234-9351135 · Fax: +49(0)234-9351137 EMAIL: info@cornelius-consult.de http://www.cornelius-consult.de

0	MIC
1	CD RIGHT
2	Muted
3	AUX RIGHT
4	LINE RIGHT
5	STEREO MIXER OUTPUT RIGHT
6	MONO MIXER OUTPUT
7	PHONE

6.1.13 MX1C Record Gain for Stereo ADC
Default: 8000h

Register 1Ch controls the record gain. Each step in bits 3:0 correspond to 1.5dB in increase/decrease in gain for the right channel, allowing 16 levels of gain, from 0000 to 1111. Each step in bits 11:8 correspond to 1.5dB in increase/decrease in gain for the left channel, allowing 16 levels of gain, from 0000 to 1111.

Bit	Type	Function
15	R/W	**Mute Control** 0: Normal 1: Mute (-∞ dB)
14:12		**Reserved**
11:8	R/W	**Left Record Gain Select** (LRG[3:0]) in 1.5 dB steps
7:4		**Reserved**
3:0	R/W	**Right Record Gain Select** (RRG[3:0]) in 1.5 dB steps

❶For LRG/RRG: 0Fh +22.5dB
00h 0 dB (No Gain)

6.1.14 MX1E Record Gain for MIC ADC
Default: 8000h

Register 1Eh controls the record gain. Each step in bits 3:0 correspond to 1.5dB in increase/decrease in gain for the right channel, allowing 16 levels of gain, from 0000 to 1111. Each step in bits 11:8 correspond to 1.5dB in increase/decrease in gain for the left channel, allowing 16 levels of gain, from 0000 to 1111.

Bit	Type	Function
15	R/W	**Mute Control** 0: Normal 1: Mute (-∞ dB)
14:12		**Reserved**
11:8	R/W	**Left Record Gain Select** (LMRG[3:0]) in 1.5 dB steps
7:4		**Reserved**
3:0	R/W	**Right Record Gain Select** (RMRG[3:0]) in 1.5 dB steps

❶For LRG/RRG: 0Fh +22.5dB
00h 0 dB (No Gain)

6.1.15 MX20 General Purpose Register
Default: 0000h

This register is used to control several functions. Bit 13 enables or disables 3D control. Bit 9 allows selection of mono output. Bit 8 controls the MIC selector. Bit 7 enables loopback of the AD output to the DA input without involving the AC-Link, allowing for full system performance measurements.

Bit	Type	Function
15:14		**Reserved**, Read as 0
13	R/W	**3D Control** 1: On 0: Off
12:9		**Reserved**, Read as 0
8	R/W	**MIC Select** 0: MIC 1 1: MIC 2
7	R/W	**AD to DA Loop-back Control** 0: Disable 1: Enable
6:0		**Reserved**

Tel: +49(0)234-9351135 · Fax: +49(0)234-9351137 EMAIL: info@cornelius-consult.de http://www.cornelius-consult.de

6.1.16 MX22 3D Control
Default: 0000h

This register is used to control the 3D stereo enhancement function built into the AC'97 component. The register bits, DP2-DP0 are used to control the separation ratios in the analog 3D and digital 3D for both LINE_OUT and HP_OUT.

The 3D stereo function provides for a deeper and wider sound experience. Note that the 3D bit in the MX20.[13] must be set to 1 to enable this function.

Bit	Type	Function
15:3		**Reserved**, Read as 0
2:0	R/W	**Depth Control** (DP[2:0])

❶3D effect control

DP[2:0]	Function	DP[2:0]	Function
000	0% (off)	100	50%
001	12.5%	101	67.5%
010	25%	110	75%
011	37.5	111	100%

6.1.17 MX24 Audio interrupt and Paging
Default: 0000h

Bit	Type	Function
15		**Interrupt Status, I4** 0: Interrupt is clear. 1: Interrupt was generated Interrupt event and status are clear by writing a 1 to this bit. The status will change regardless of interrupt enable (I0).
14	R	**Interrupt Cause, I3** I3=0: GPIO, SPDIF-IN and Jack-Detect interrupt status in MX78 are not changed. 1: GPIO, SPDIF-IN and Jack-Detect interrupt status in MX78 are changed. I3= (MX78.14|MX78.13|MX78.12|MX78.6|MX78.5|MX78.4) This bit reflects the cause of the **first** interrupt event generated. Software should read it after interrupt status (I4) has been confirmed as interrupting. I3 will be zero when I4 is cleared.
13	R	**Interrupt Cause, I2** I2=0: Sense value in page ID-01h MX6A.[12:8] has not changed. 1: Sense cycle completed or new sense value in page ID-01h MX6A.[12:8] is available. This bit reflects the cause of the **first** interrupt event generated. Software should read it after interrupt status (I4) has been confirmed as interrupting. I2 will be zero when I4 is cleared.
12	R/W	**Sense Cycle, I1** 0: Sense cycle not in progress 1: Sense cycle start Writing a '1' to this bit causes a sense cycle start. If a sense cycle is in progress, writing a '0' to this bit will abort the sense cycle. Whether the data in the sense result register (page ID-01h MX6A) is valid or not is determined by the IV bit in MX6A, Page ID-1h.
11	R/W	**Interrupt Enable, I0** 0: Interrupt is masked, interrupt status (I4) will not be shown in bit 0 in Slot 12 in SDATA-IN. 1: Interrupt is un-masked, interrupt status (I4) will be shown in bit 0 in Slot 12 in SDATA-IN.
10:4	NA	Reserved, read as 0
3:0	R/W	**Page Selector, PG[3:0]** 0000b: Vendor Specific 0001b: Page ID 01 (AC'97 2.3 Discovery Descriptor Definition) Others: Reserved. This register is used to select a descriptor of 16 word pages between registers MX60 to MX6F. Value of 0 is used to select vendor specific space to maintain compatibility with AC'97 2.2 vendor specific register.

Tel: +49(0)234-9351135 · Fax: +49(0)234-9351137 EMAIL: info@cornelius-consult.de http://www.cornelius-consult.de

		Once PG[3:0] is not 0000b and 0001b, ALC250 will return zero data for ACLINK mixer read command.

6.1.18 MX26 Powerdown Control/Status
Default: 000Fh

This read/write register is used to program powerdown states and monitor subsystem readiness. The lower half of this register is read only status; a "1" indicating that the subsection is "ready." Ready is defined as the subsection's ability to perform in its nominal state.

When the AC-Link "CODEC Ready" indicator bit (SDATA_IN slot 0, bit 15) is a 1, it indicates that the AC-Link and AC'97 control and status registers are in a fully operational state. The AC'97 controller must further probe this powerdown control /status register to determine exactly which subsections, if any are ready.

Bit	Type	Function
15	R/W	**PR7 External Amplifier Power Down** (EAPD) 0: Normal 1: Power down
14	R/W	**PR6** 0: Normal 1: Power down Headphone Out (HP-OUT, pin-39/41)
13	R/W	**PR5** 0: Normal 1: Disable internal clock
12	R/W	**PR4** 0: Normal 1: Power down AC-Link
11	R/W	**PR3** 0: Normal 1: Power down Mixer (Vref off)
10	R/W	**PR2** 0: Normal 1: Power down Mixer (Vref still on)
9	R/W	**PR1** 0: Normal 1: Power down PCM DAC
8	R/W	**PR0** 0: Normal 1: Power down PCM ADC and input MUX
7:4		**Reserved**, Read as 0
3	R	**Vref Status** 1: Vref is up to normal level 0: Not yet ready
2	R	**Analog Mixer Status** 1: Ready 0: Not yet ready
1	R	**DAC Status** 1: Ready 0: Not yet ready
0	R	**ADC Status** 1: Ready 0: Not yet ready

❶True table for power down mode :

	ADC	DAC	Mixer	Verf	ACLINK	Int CLK	HP-OUT	EAPD
PR0=1	PD							
PR1=1		PD						
PR2=1			PD				PD	
PR3=1	PD	PD	PD	PD			PD	
PR4=1	PD	PD			PD			
PR5=1	PD	PD				PD		
PR6=1							PD	
PR7=1								PD

PD: Power down Blank: Don't care

❷If Mixer is power down (PR2=1 or PR3=1), the LINE-OUT (pin-35/36) is shut down and its output is floated.
❸If Headphone-Out is power down (PR6=1), the HP-OUT (pin-39/41) is shut down and its output is floated.

Tel: +49(0)234-9351135 · Fax: +49(0)234-9351137 EMAIL: info@cornelius-consult.de http://www.cornelius-consult.de

6.1.19 MX28 Extended Audio ID
Default: 0605h

The Extended Audio ID register is a read only register used to communicate information to the digital controller on two functions. ALC250 is designed as the primary CODEC with ID is '00'.

Bit	Type	Function
15:14	R	**ID[1:0], read as '00'.**
13:12		**Reserved**, Read as 0
11:10	R	REV[1:0]=10 to indicate that the ALC250 is AC'97 rev2.3 compliant
9	R	**AMAP** read as 1 (DAC mapping based on ID)
8:6		**Reserved**, Read as 0
5:4	R/W	**DAC Slot Assignment** DSA[1:0] (Default value depends on ID[1:0]) DSA[1:0] Controls the DAC slot assignment, as described in AC'97 rev2.2.
3		**Reserved**, Read as 0
2	R	**SPDIF** Read as 1 (S/PDIF is supported)
1	R	**DRA** Read as 1
0	R	**VRA** Read as 1 (Variable Rate Audio is supported)

❶The ALC250 maps DAC slot according to the following table: (default maps to AC'97 spec. rev2.3)

DSA[1:0]	Left DAC slot #	Right DAC slot #	Comment
0,0	3	4	Default when ID[1:0]=00
0,1	7	8	Default when ID[1:0]=01,10
1,0	6	9	Default when ID[1:0]=11
1,1	10	11	-

6.1.20 MX2A Extended Audio Status and Control
Default: 0000h

This register contains two active bits for powerdown and status of the surrounding DACs. Bits 0, 1 & 2 are read/write bits which are used to enable or disable VRA, DRA and SPDIF respectively. Bits 4 & 5 are read/write bits used to determine the AC-LINK slot assignment of the S/PDIF. Bit 10 is a read only bit which tells the controller if the S/PDIF configuration is valid.

Bit	Type	Function
15	R/W	**Validity Configuration of S/PDIF Output** (VCFG) Combines with MX3A.15 to decide validity control in S/PDIF output signal.
14:11	NA	**Reserved**
10	R	**S/PDIF Configuration Valid** (SPCV) 0: Current S/PDIF configuration {SPSA,SPSR,DAC/slot rate} is not valid. 1: Current S/PDIF configuration {SPSA,SPSR,DAC/slot rate} is valid.
9:6		**Reserved**
5:4	R/W	**SPSA[1:0], S/PDIF Slot Assignment when DRS=0** 00: S/PDIF source data assigned to AC-LINK slot3/4 01: S/PDIF source data assigned to AC-LINK slot7/8 (Default when ID=00) 10: S/PDIF source data assigned to AC-LINK slot6/9 (Default when ID=01,10) 11: S/PDIF source data assigned to AC-LINK slot10/11 (Default when ID=11) **SPSA[1:0], S/PDIF-Out Slot Assignment when DRS=1(for 96K S/PDIF-Out)** 01: S/PDIF-Out source is from AC-LINK slot3/4 + slot7/8.
3		**Reserved**
2	R/W	**SPDIF** 1: Enable 0: Disable (SPDIFO is in high impedance)
1	R/W	**DRA** 1: Enable 0: Disable
0	R/W	**VRA** 1: Enable 0: Disable

❶ If VRA = 0, ALC250 ADC/DAC operate at fixed 48KHz sampling rate. Otherwise, it operates with variable sampling rate defined in MX2C and MX32. VRA also control write operation of MX2Cand MX32.
❷ DRA can be written when (ID=00)&(DSA=00), otherwise it is always 0.

Tel: +49(0)234-9351135 · Fax: +49(0)234-9351137 EMAIL: info@cornelius-consult.de http://www.cornelius-consult.de

If DRA = 1, DAC operates at a fixed 96KHz sampling rate. The PCM(n) and PCM(n+1) data is captured in the same frame. In this mode, MX2C is fixed at BB80h, MX32 and ADC is still controlled by VRA.

❸**SPCV** is a read only bit that indicates whether the current S/PDIF-Out configuration is supported or not. If the configuration is supported, SPCV is set as 1 by H/W. So driver can check this bit to determine the status of the S/PDIF transmitter system. SPCV is always operating, independent of the SPDIF enable bit (MX2A.2). The S/PDIF output is active if MX2A.2 is set in spite of SPCV. Once S/PDIF output is enabled but SPCV is invalid (SPCV=0), channel status is still output, but the output data bits will be all zero.

6.1.21 MX2C PCM DAC Rate
Default: BB80h

The ALC250 allows adjustment of the output sample rate. This register is used to adjust the sample rate. By changing the values, sampling rates from 8000 to 48000 can be chosen.

Bit	Type	Function
15:0	R/W	**Output Sampling Rate** FOSR[15:0]

❶ The ALC250 supports the following sampling rates, as required in the PC99/PC2001 design guide.

Sampling rate	FOSR[15:0]
8000	1F40h
11025	2B11h
12000	2EE0
16000	3E80h
22050	5622h
24000	5DC0
32000	7D00h
44100	AC44h
48000	BB80h

❷Note that If the value written is not support, the closest value is returned.
When MX2A.0=0 (VRA is disable), this register will return BB80h when read.

6.1.22 MX32 PCM ADC Rate
Default: BB80h

The ALC250 allows adjustment of the input sample rate. This register is used to adjust the sample rate. By changing the values, sampling rates from 8000 to 48000 can be chosen.

Bit	Type	Function
15:0	R/W	**Output Sampling Rate** FISR[15:0]

❶ The ALC250 supports the following sampling rates, as required in the PC99/PC2001 design guide.

Sampling rate	FISR[15:0]
8000	1F40h
11025	2B11h
12000	2EE0
16000	3E80h
22050	5622h
24000	5DC0
32000	7D00h
44100	AC44h
48000	BB80h

❷Note that If the value written is not support, the closest value is returned.
When MX2A.0=0 (VRA is disable), this register will return BB80h when read.

6.1.23 MX3A S/PDIF Out Channel Status/Control
Default: 2000h

Tel: +49(0)234-9351135 · Fax: +49(0)234-9351137 EMAIL: info@cornelius-consult.de http://www.cornelius-consult.de

Bit	Type	Function
15	R/W	**Validity Control** (control V bit in Sub-Frame) 0: The V bit (valid flag) in sub-frame depends on whether the S/PDIF data is under-run or over-run. 1: The V bit in sub-frame is always send as 1 to indicate the invalid data is not suitable for receiver.
14	R	**DRS (Double Rate S/PDIF)** 0: 32K, 44.1K, 48K S/PDIF-Out 1: 96K S/PDIF-Out *This bit only can be set when SPSR is 10b.*
13:12	R/W	**S/PDIF Sample Rate** SPSR[1:0] 00: Sample rate set to 44.1KHz, Fs[**0:3**]=0000 01: Reserved 10: Sample rate set to 48.0KHz, Fs[**0:3**]=0100 (default) 11: Sample rate set to 32.0KHz, Fs[**0:3**]=1100
11	R/W	**Generation Level** (LEVEL)
10:4	R/W	**Category Code (**CC[6:0])
3	R/W	**Preemphasis** (PRE) 0: None 1: Filter preemphasis is 50/15 usec
2	R/W	**Copyright** (COPY) 0: Not asserted 1: Asserted
1	R/W	**Non-Audio Data type** (/AUDIO) 0: PCM data 1: AC3 or other digital non-audio data
0	R	**Professional or Consumer format** (PRO) 0: Consumer format 1: Professional format The ALC250 supports consumer channel status format, so this bit is always 0.

❶The consumer channel status block (bit0~bit31):

0	1	2	3	4	5	6	7
PRO=0	/AUDIO	COPY	PRE	0	0	0	0
8	9	10	11	12	13	14	15
CC0	CC1	CC2	CC3	CC4	CC5	CC6	LEVEL
16	17	18	19	20	21	22	23
0	0	0	0	0	0	0	0
24	25	26	27	28	29	30	31
Fs0	Fs1	Fs2	Fs3	0	0	0	0

❷ The “V” bit in the sub-frame is determined by Validity control (MX3A.15) and VCFG (MX2A.15):

Validity	VCFG	Operation
0	0	If S/PDIF FIFO is under-run, the “V” bit in the sub-frame is set to indicate that the S/PDIF data is invalid.
0	1	If S/PDIF FIFO is under-run, the “V” bit in the sub-frame is always 0, and pads the data with “0”s.
1	0	The “V” bit is always 1, and data bits (bit 8 ~ bit 27) should be forced to 0.
1	1	The “V” bit in sub-frame is always “0”, and the S/PDIF output data should be forced to zero.

Tel: +49(0)234-9351135 · Fax: +49(0)234-9351137 EMAIL: info@cornelius-consult.de http://www.cornelius-consult.de

6.2 Vendor Defined Registers (Page ID-00h)

These registers are available to Realtek and Realtek customers for specialized functions.

6.2.1 MX60 S/PDIF Input Channel Status [15:0]

Default: 0000h

The data in MX60 are captured from channel status [15:0] of S/PDIF-IN signal.

Bit	Type	Function
15	R	LEVEL (Generation Level)
14:8	R	CC[6:0] (Category Code)
7:6	R	Mode[1:0]
5:3	R	PRE[2:0] (Pre-Emphasis)
2	R	COPY (Copyright) 0: asserted 1: Not asserted
1	R	/AUDIO (Non-Audio Data type) 0: PCM data 1: AC3 or other digital non-audio data
0	R	PRO (Professional or Consumer format) 0: consumer format 1: professional format

6.2.2 MX62 S/PDIF Input Channel Status [29:15]

Default: 0000h

The data in MX62 are captured from channel status [29:16] of S/PDIF-IN signal.

Bit	Type	Function
15	R	"V" bit in sub-frame of SPDIFI 0: Data X and Y are valid 1: At least one of data X and Y is invalid This bit is real-time updated, and it is meaning when S/PDIF-IN is locked
14	R	S/PDIF-IN Input Signal Locked by hardware 0: Unlocked 1: Locked
13:12	R	Ca[1:0] (Clock Accuracy)
11:8	R	Fs[3:0]. (Sample Frequency in channel status) 0000: 44.1KHz 0010: 48 KHz 0011: 32 KHz Others: Reserved
7:4	R	Cn[3:0] (Channel Number)
3:0	R	Sn[3:0] (Source Number)

6.2.3 MX64 EQualizer Control Index Port

Default: 0000h

Bit	Type	Function
15:6	NA	Reserved
3:0	R/W	**EQ Control Registers Index**

6.2.4 MX64 EQualizer Control Data Port

Default: 0000h

Bit	Type	Function
15:0	R/W	**EQ Control Registers Data**

Tel: +49(0)234-9351135 · Fax: +49(0)234-9351137 EMAIL: info@cornelius-consult.de http://www.cornelius-consult.de

❶Data written into this mixer will set the EQ register MX64 points to. Read this mixer will get the register content MX60 points to.

6.2.5 MX6A Data Flow Control
Default: 0308h

Bit	Type	Function
15	R/W	**SDATA-IN Slot 6 Source** 0: EQ&MIC ADC Left Channel 1: Original ADC Left Channel
14	R/W	**Direct DAC Mode** 0: Analog output is from summation of DAC and analog inputs. 1: Analog output is from DAC.
13:12	R/W	**S/PDIF Out Source** 00: S/PDIF data is from ACLINK controller 01: Reserved. 10: Directly bypass S/PDIF-In signal to S/PDIF-Out. 11: Reserved.
11	R/W	**Recorded PCM Data to ACLINK** 0: Recorded PCM data to host is from original ADC 1: Recorded PCM data to host is from S/PDIF-IN
10	R/W	**DAC Source** 0: DAC data is from ACLINK controller. 1: DAC data is from DPE.
9	R/W	**DPE (Digital Process Engine) ADC Source** 0: EQ&MIC ADC. 1: Original ADC.
8	R/W	**EQ&MIC ADC Record Select** 0: From mixed signal of MIC, LINE-In, CD-In, AUX-In and VIDEO-In. 1: Left channel is from MIC, right channel is from sum of others. Data to DPE is composed of right channel and its duplicated one.
7	R/W	**MIC2 Source** 0: MIC2 1: (MIC1+MIC2)/2.
6	R/W	**ADC MIC Source** 0: Mono duplicated. (Default) 1: Stereo.
5:4	NA	Reserved
3:2	R/W	**Function Selection for pin-47 and pin-16.**
1	R/W	**S/PDIF-In Enable** 0: Disable 1: Enable
0	R/W	**S/PDIF-In Monitoring Control** 0: Disable, SPDIFI data is not added into PCM data to DAC. (Default) 1: Enable, SPDIFI data will be added into PCM data to DAC after SPDIFI is locked.

MX6A.[3:2]	Pin-47	Pin-16	Note
00	EAPD (Out)	S/PDIF-In (In)	
01	EAPD (Out)	JD2 (In)	
10	S/PDIF-In (In)	JD2 (In)	(Default)
11	JD2 (In)	S/PDIF-In (In)	Compatible with ALC202

Tel: +49(0)234-9351135 · Fax: +49(0)234-9351137 EMAIL: info@cornelius-consult.de http://www.cornelius-consult.de

6.3 Discovery Descriptor (Page ID-01h)

These registers are defined in Ac'97 2.3 for sensing and analog plug&play functions.

6.3.1 MX62 PCI Sub System ID
Default: FFFFh

Bit	Type	Function
15:0	R/W	**PCI Sub System Vendor ID** This register can be written once only after power on. BIOS can set its own sub-system ID. The default value FFFFh means this register is implemented and data is not set by BIOS.

6.3.2 MX64 PCI Sub Vendor ID
Default: FFFFh

Bit	Type	Function
15:0	R/W	**PCI Vendor ID** This register can be written once only after power on. BIOS can set its own sub-vendor ID. The default value FFFFh means this register is implemented and data is not set by BIOS.

6.3.3 MX66 Sense Function Select
Default: 0000h

Bit	Type	Function
15:5		Reserved
4:1	R/W	**Function Code bits, FC[3:0]** These bits specify the type of audio function described in page ID-01h MX66, MX68 and MX6A. 0h: LINE OUT 1h: HP OUT 5h: MIC1 In 6h: MIC2 In 7h: LINE In Others: Not supported
0	R/W	**Tip or Ring Selection, T/R** This bit sets which jack conductor the sense value is measured from. It is combined with FC[3:0]. 0: Tip (Left channel) 1: Ring (Right channel)

6.3.4 MX68 Sense Function Information
Default: 02F1h

Bit	Type	Function
15:11	R/W	**Gain bits, G[4:0]** These bits are updated by BIOS to tell driver the gain supported by external amplifier. 1 LSB = 1.5dBV 00000b: 0dBV, 00001b: +1.5dBV,… 01111b:+24dBV 10000b: 0dBV, 10001b: -1.5dBV,… 11111b: -24dBV
10	R/W	**Inversion bit, INV** 0: No inversion reported 1: Inverted.
9:5	R/W	**Buffer delays, DL[4:0]** Delay measurement for the signal from inputs to outputs channels in 20.83 usec (1/48000 second) units.
4	R/W	**Information Valid bit, IV** 0: After a sense cycle is completed indicates that **no** information is provided on the sensing method 1: After a sense cycle is completed indicates that information is provided on the sensing method Clearing this bit by writing "1", writing "0" to this bit has no effect.

Tel: +49(0)234-9351135 · Fax: +49(0)234-9351137 EMAIL: info@cornelius-consult.de http://www.cornelius-consult.de

3:1	NA	Reserved
0	R	**Function Information Present, FIP** This bit is set to a '1' indicates that the G[4:0], INV, DL[4:0] and ST[2:0] bits are supported and are Read/Write capable.

6.3.5 MX6A Sense Detail
Default: 0000h

Bit	Type	Function
15:13	R/W	**Connection/Jack Location bits, ST[2:0]** 000b: Rear I/O Panel (Default) 001b: Front Panel 010b: Motherboard 011b: Dock/External 100b ~ 110b: Reserved 111b: Unused I/O. These bits should be written by BIOS to let driver know where those I/O FC[3:0] specify are located.
12:8	R	**Sense bits, S[4:0]** (Default value depends on sensed result after Cold Reset) For output devices: 02h: Not specificed or unknown 05h: Powered speaker 06h: Earphone or passive speaker Other: Not supported For input deices: 12h: Not specified or unknown 13h: Mono Microphone 15h: Stereo Line-In Other: Not supported This field reports the type of output/input peripheral plugged in the jack after sensing.
7:0	R	Always read as 0.

Tel: +49(0)234-9351135 · Fax: +49(0)234-9351137 EMAIL: info@cornelius-consult.de http://www.cornelius-consult.de

6.4 Extension Registers

6.4.1 MX76 GPIO & Interrupt Setup
Default: 0000h

Bit	Type	Function
15	R/W	**GPIO Statue Indication in SDATA_IN** 0:The status of JD and its valid tag is not indicated in SDATA_IN. 1: The status of JD and its valid tag is indicated in SDATA_IN
14	R/W	**SPDIFI Valid Interrupt Enable** 0:Disable 1: Enable
13	R/W	**SPDIFI Lock Interrupt Enable** 0:Disable 1: Enable
12	R/W	**JD2 (Jack-Detect 2) interrupt Enable** 0: Disable 1: Enable. A low to high transaction will trigger the JD2 interrupt in bit0 of SDATA_IN's slot-12.
11:7		Reserved
6	R/W	**JD1 (Jack-Detect 1) interrupt Enable** 0: Disable 1: Enable. A low to high transaction will trigger the JD interrupt in bit0 of SDATA_IN's slot-12.
5:0		Reserved

6.4.2 MX78 GPIO & Interrupt Status
Default: 0000h

Bit	Type	Function
15	NA	Reserved
14	R/W	**S/PDINF-In Valid Interrupt Status (SPDIFIN_VIS)**. 0: No SPDIFI Valid Interrupt. 1: SPDIFI Valid interrupt. Write 1 to clear this status bit and its interrupt.
13	R/W	**S/PDINF-In Lock Interrupt Status (SPDIFIN_LIS)**. 0: No SPDIFI Lock interrupt. 1: SPDIFI LOCK interrupt. Write 1 to clear this status bit and its interrupt.
12	R/W	**JD2 Interrupt Status (JD2_IS)** 0: No JD2 interrupt. 1: JD2 interrupt. Write 1 to clear this status bit.
11:7	NA	Reserved
6	R/W	**JD1 Interrupt Status (JD1_IS)** 0: No JD1 interrupt. 1: JD1 interrupt. Write 1 to clear this status bit.
5:3	NA	Reserved
2	R	**Jack-Detect Event (JDEVT)** 0: No Jack-Detect event occurs. 1: Jack-Detect event occurs. ***JDEVT = JDS1 | JDS2*** Software can check this bit and MX7A.1 to know the status of JDx. When MX7A.5=0, MX7A.1=JDS1. When MX7A.5=1, MX7A.1=JDS2.
0	NA	Reserved

Tel: +49(0)234-9351135 · Fax: +49(0)234-9351137 EMAIL: info@cornelius-consult.de http://www.cornelius-consult.de

6.4.3 MX7A Miscellaneous Control
Default: 0000h

Bit	Type	Function
15:11	NA	Reserved
10	R/W	**Pin-37 Function Selection (MONO-OUT or Vrefout3)** 0: Vrefout3 1: MONO-OUT
9	R/W	**Vrefout Off Control** 0: Vrefout is normal on (output of buffered Vref). 1: Vrefout is off. (In High-Z).
8	R/W	**Vrefout / Vrefout2 / Vrefout3 Level Control** 0: 2.5V 1: 4.0V
7:6	NA	Reserved
5	R/W	**Source of Jack-Detect status for MX7A.1** 0: MX7A.1 indicates the status of Jack-Detect 1 1: MX7A.1 indicates the status of Jack-Detect 2
4	R/W	**HP-OUT Control** 0: Normal 1: HP-OUT is muted by H/W when MX7A.1=1
3	R/W	**MONO-OUT Control** 0: Normal 1: MONO-OUT is muted by H/W when MX7A.1=1
2	R/W	**SPDIF Output Gating** 0: SPDIF output is not gated with MX7A.1 1: SPDIF output is gated with MX7A.1.
1	R	**Status of Jack-Detect 1 or 2 (JDSx)** 0: JDSx is pull low 1: JDSx is floating or pull high
0	R/W	**LINE-OUT Output Control** 0: Normal 1: LINE-OUT output is muted by H/W when MX7A.1=1

6.4.4 MX7C Vendor ID1

The two registers (MX7C Vendor ID1 and MX7E Vendor ID2) contain four 8-bit ID codes. The first three codes have been assigned by Microsoft for Plug and Play definitions. The fourth code is a Realtek assigned code identifying the ALC250. The MX7C Vendor ID1 register contains the value 414Ch, which is the first and second characters of the Microsoft ID code. The MX7C Vendor ID2 register contains the value 4750h, which is the third of the Microsoft ID code

Default: 414Ch

Bit	Type	Function
15:0	R	**Vendor ID "AL"**

6.4.5 MX7E Vendor ID2
Default: 4750h

Bit	Type	Function
15:8	R	**Vendor ID - "G"**
7:0	R	**Device ID** – 50h for ALC250

Tel: +49(0)234-9351135 · Fax: +49(0)234-9351137 EMAIL: info@cornelius-consult.de http://www.cornelius-consult.de

6.5 EQualizer Control Registers

6.5.1 Index-00h EQ Band-0 Coefficient (Low Pass Filter, LP0: a1)

Default: 0000h

Bit	Type	Function
15:0	R/W	16-bit 2's complement coefficient. Range= -2 ~ 1.99

6.5.2 Index-02h EQ Band-0 Gain (Low Pass Filter, LP0: Ho)

Default: 0000h

Bit	Type	Function
15:0	R/W	16-bit 2's complement coefficient. Range= -8 ~ 7.99. (Gain=-20dB ~ +20dB)

6.5.3 Index-03h EQ Band-1 Coefficient (Band Pass Filter, BP1: a1)

Default: 0000h

Bit	Type	Function
15:0	R/W	16-bit 2's complement coefficient. Range= -2 ~ 1.99

6.5.4 Index-04h EQ Band-1 Coefficient (Band Pass Filter, BP1: a2)

Default: 0000h

Bit	Type	Function
15:0	R/W	16-bit 2's complement coefficient. Range= -2 ~ 1.99

6.5.5 Index-05h EQ Band-1 Gain (Band Pass Filter, BP1: Ho)

Default: 0000h

Bit	Type	Function
15:0	R/W	16-bit 2's complement coefficient. Range= -8 ~ 7.99. (Gain=-20dB ~ +20dB)

6.5.6 Index-06h EQ Band-2 Coefficient (Band Pass Filter, BP1: a1)

Default: 0000h

Bit	Type	Function
15:0	R/W	16-bit 2's complement coefficient. Range= -2 ~ 1.99

6.5.7 Index-07h EQ Band-2 Coefficient (Band Pass Filter, BP1: a2)

Default: 0000h

Bit	Type	Function
15:0	R/W	16-bit 2's complement coefficient. Range= -2 ~ 1.99

6.5.8 Index-08h EQ Band-2 Gain (Band Pass Filter, BP2: Ho)

Default: 0000h

Bit	Type	Function
15:0	R/W	16-bit 2's complement coefficient. Range= -8 ~ 7.99. (Gain=-20dB ~ +20dB)

6.5.9 Index-09h EQ Band-3 Coefficient (Band Pass Filter, BP3: a1)

Default: 0000h

Bit	Type	Function

Tel: +49(0)234-9351135 · Fax: +49(0)234-9351137 EMAIL: info@cornelius-consult.de http://www.cornelius-consult.de

15:0	R/W	16-bit 2's complement coefficient. Range= -2 ~ 1.99

6.5.10 Index-0Ah EQ Band-3 Coefficient (Band Pass Filter, BP3: a2)
Default: 0000h

Bit	Type	Function
15:0	R/W	16-bit 2's complement coefficient. Range= -2 ~ 1.99

6.5.11 Index-0Bh EQ Band-3 Gain (Band Pass Filter, BP3: Ho)
Default: 0000h

Bit	Type	Function
15:0	R/W	16-bit 2's complement coefficient. Range= -8 ~ 7.99. (Gain=-20dB ~ +20dB)

6.5.12 Index-0Ch EQ Band-4 Coefficient (Band Pass Filter, BP4: a1)
Default: 0000h

Bit	Type	Function
15:0	R/W	16-bit 2's complement coefficient. Range= -2 ~ 1.99

6.5.13 Index-0Dh EQ Band-4 Coefficient (Band Pass Filter, BP4: a2)
Default: 0000h

Bit	Type	Function
15:0	R/W	16-bit 2's complement coefficient. Range= -2 ~ 1.99

6.5.14 Index-0Eh EQ Band-4 Gain (Band Pass Filter, BP4: Ho)
Default: 0000h

Bit	Type	Function
15:0	R/W	16-bit 2's complement coefficient. Range= -8 ~ 7.99. (Gain=-20dB ~ +20dB)

6.5.15 Index-0Fh EQ Band-5 Coefficient (Band Pass Filter, BP5: a1)
Default: 0000h

Bit	Type	Function
15:0	R/W	16-bit 2's complement coefficient. Range= -2 ~ 1.99

6.5.16 Index-10h EQ Band-5 Coefficient (Band Pass Filter, BP5: a2)
Default: 0000h

Bit	Type	Function
15:0	R/W	16-bit 2's complement coefficient. Range= -2 ~ 1.99

6.5.17 Index-11h EQ Band-5 Gain (Band Pass Filter, BP5: Ho)
Default: 0000h

Bit	Type	Function
15:0	R/W	16-bit 2's complement coefficient. Range= -8 ~ 7.99. (Gain=-20dB ~ +20dB)

6.5.18 Index-12h EQ Band-6 Coefficient (High Pass Filter, HP6: a1)
Default: 0000h

Tel: +49(0)234-9351135 · Fax: +49(0)234-9351137 EMAIL: info@cornelius-consult.de http://www.cornelius-consult.de

Bit	Type	Function
15:0	R/W	16-bit 2's complement coefficient. Range= -2 ~ 1.99

6.5.19 Index-13h EQ Band-6 Coefficient (High Pass Filter, HP6: a2) Default: 0000h

Bit	Type	Function
15:1	NA	Reserved
0	R/W	0: 20dB/decade slope 1: 40dB/decade slope (2 cascaded HP6)

6.5.20 Index-20h EQ Control & Status Register Default: 0000h

Bit	Type	Function
15	R/W	Digital Process Engine Output Control 0: Bypass digital EQ (Default) 1: Digital EQ output.
14	R/W	EQ Band-6 Control. 0: Disable 1: Enable.
13	R/W	EQ Band-5 Control. 0: Disable 1: Enable.
12	R/W	EQ Band-4 Control. 0: Disable 1: Enable.
11	R/W	EQ Band-3 Control. 0: Disable 1: Enable.
10	R/W	EQ Band-2 Control. 0: Disable 1: Enable.
9	R/W	EQ Band-1 Control. 0: Disable 1: Enable.
8	R/W	EQ Band-0 Control. 0: Disable 1: Enable.
7	R/W	**Bypass Digital EQ Control by JDx** 0:Normal, bypass EQ control is decided by EQ Control&Status register Index-20h.15 (Default) 1: Bypass digital EQ by H/W when MX7A.1=1 The EQ function is planned to compensate frequency response for mini speaker, it should be bypassed when headphone jack is plugged to be output device.
6	R	EQ Band-6 Status. 0: Normal 1: Overflow. This bit is set if overflow had ever occurred. Write 1 to clear it.
5	R	EQ Band-5 Status. 0: Normal 1: Overflow. This bit is set if overflow had ever occurred. Write 1 to clear it.
4	R	EQ Band-4 Status. 0: Normal 1: Overflow. This bit is set if overflow had ever occurred. Write 1 to clear it.
3	R	EQ Band-3 Status. 0: Normal 1: Overflow. This bit is set if overflow had ever occurred. Write 1 to clear it.
2	R	EQ Band-2 Status. 0: Normal 1: Overflow. This bit is set if overflow had ever occurred. Write 1 to clear it.
1	R	EQ Band-1 Status. 0: Normal 1: Overflow. This bit is set if overflow had ever occurred. Write 1 to clear it.
0	R	EQ Band-0 Status. 0: Normal 1: Overflow. This bit is set if overflow had ever occurred. Write 1 to clear it.

❶Write to EQ coefficient-{a1,a1,Ho} will be ignored when specific control bit is enabled, it means modify individual EQ coefficients is forbidden when EQ is working.

6.5.21 Index-21h EQ PCM Digital Volume Control Default: 007Fh

Bit	Type	Function
15	R/W	**Mute Control.** 0: Turn on 1: Mute, force data to zero. (-∞ dB)
14:7		Reserved

Tel: +49(0)234-9351135 · Fax: +49(0)234-9351137 EMAIL: info@cornelius-consult.de http://www.cornelius-consult.de

6:0	R/W	**7-bit Volume Ratio, EQVR[7:0]** The multiplier ratio is EQVR[7:0]/128. (1/128 ~ 1)

❶If 7-bit volume ratio is 7Fh, it means the multiplier is 1 (0dB).

6.5.22 Index-22h EQ MIC ADC Digital Volume Control Default: 007Fh

Bit	Type	Function
15	R/W	**Mute Control.** 0: Turn on 1: Mute, force data to zero. (-∞ dB)
14:7		Reserved
6:0	R/W	7-bit Volume Ratio, EQMICVR[7:0] The multiplier ratio is EQMICVR[7:0]/128. (1/128 ~ 1)

❶If 7-bit volume ratio is 7Fh, it means the multiplier is 1 (0dB).

Tel: +49(0)234-9351135 · Fax: +49(0)234-9351137 EMAIL: info@cornelius-consult.de http://www.cornelius-consult.de

7. Electrical Characteristics

7.1 DC Characteristics

7.1.1 Absolute Maximum Ratings

Parameter	Symbol	Minimum	Typical	Maximum	Units
Power Supplies					
Digital	DVDD	3.0	3.3	3.6	V
Analog	AVDD	3.0	5.0	5.5	V
Operating Ambient Temperature	Ta	0	-	+70	°C
Storage Temperature	Ts			+125	°C

7.1.2 Threshold Hold Voltage

Dvdd= 3.3V±5%, $T_{ambient}$=25°C, with 50pF external load.

Parameter	Symbol	Minimum	Typical	Maximum	Units
Input voltage range	V_{in}	-0.30	-	Dvdd+0.30	V
Low level input voltage (AC-LINK, XTAL-IN/OUT)	V_{IL}	-	-	0.50*Dvdd	V
Low level input voltage (SCK,SDA)	V_{IL}	-	-	1.0	V
Low level input voltage (JD1, JD2)	V_{IL}	-	-	2.0	V
High level input voltage (AC-LINK, XTAL-IN/OUT)	V_{IH}	0.5*DVdd	-	-	V
High level input voltage (SCK, SDA)	V_{IH}	2.0	-	-	V
High level input voltage (JD1, JD2)	V_{IH}	2.0		-	V
High level output voltage	V_{OH}	0.9DVdd		-	V
Low level output voltage	V_{OL}	-	-	0.1DVdd	V
Input leakage current	-	-10	-	10	µA
Output leakage current (Hi-Z)	-	-10	-	10	µA
Output buffer drive current	-	-	5	-	mA
Internal pull up resistance	-	30k	50k	100k	Ω

7.1.3 Digital Filter Characteristics

Filter	Symbol	Minimum	Typical	Maximum	Units
ADC Lowpass Filter	Passband	10	-	20.0	KHz
	Stopband	28.8			KHz
	Stopband Rejection		-76.0		dB
	Passband Frequency Response		+- 0.20		dB
DAC Lowpass Filter	Passband	10	-	20.0	KHz
	Stopband	28.8			KHz
	Stopband Rejection		-78.5		dB
	Passband Frequency Response		+- 0.20		dB

7.1.4 S/PDIF output Characteristics

Dvdd= 3.3V, $T_{ambient}$=25°C, with 75Ω external load.

Tel: +49(0)234-9351135 · Fax: +49(0)234-9351137 EMAIL: info@cornelius-consult.de http://www.cornelius-consult.de

Parameter	Symbol	Minimum	Typical	Maximum	Units
High level output voltage	V_{OH}	3.0	3.3		V
Low level output voltage	V_{OL}	-	0	0.5	V

7.2 AC Timing Characteristics

7.2.1 Cold Reset

Parameter	Symbol	Minimum	Typical	Maximum	Units
RESET# active low pulse width	T_{rst_low}	1.0	-	-	µs
RESET# inactive to BIT_CLK Startup delay	$T_{rst2clk}$	162.8	-	-	ns

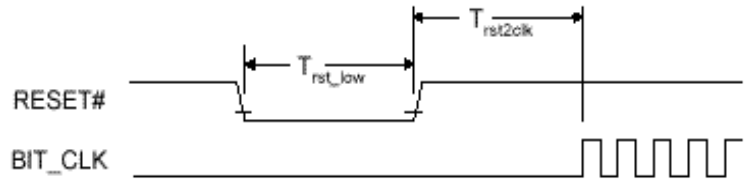

Cold reset timing diagram

7.2.2 Warm Reset

Parameter	Symbol	Minimum	Typical	Maximum	Units
SYNC active high pulse width	T_{sync_high}	1.0	-	-	µs
SYNC inactive to BIT_CLK Startup delay	$T_{sync2clk}$	162.8	-	-	ns

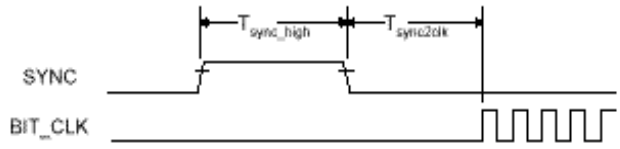

Warm reset timing diagram

7.2.3 AC-Link Clocks

Parameter	Symbol	Minimum	Typical	Maximum	Units
BIT_CLK frequency		-	12.288	-	MHz
BIT_CLK period	T_{clk_period}	-	81.4	-	ns
BIT_CLK output jitter		-	-	750	ps
BIT_CLK high pulse width (note 2)	T_{clk_high}	36	40.7	45	ns
BIT_CLK low pulse width (note 2)	T_{clk_low}	36	40.7	45	ns
SYNC frequency		-	48.0	-	KHz
SYNC period	T_{sync_period}	-	20.8	-	µs
SYNC high pulse width	T_{sync_high}	-	1.3	-	µs
SYNC low pulse width	T_{sync_low}	-	19.5	-	µs
Note 1: Worse case duty cycle restricted to 45/55.					

Tel: +49(0)234-9351135 · Fax: +49(0)234-9351137 EMAIL: info@cornelius-consult.de http://www.cornelius-consult.de

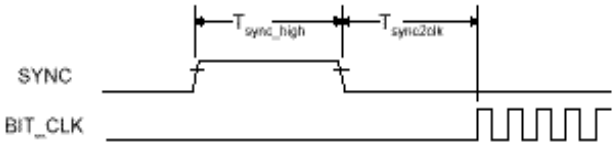

BIT_CLK and SYNC timing diagram

7.2.4 Data Output and Input Timing

Parameter	Symbol	Minimum	Typical	Maximum	Units
Output Valid Delay from rising edge of BIT_CLK	t_{co}	-	-	15	ns
Note 1: Timing is for SDATA and SYNC outputs with respect to BIT_CLK at the device driving the output. Note 2: 50pF external load					

Parameter	Symbol	Minimum	Typical	Maximum	Units
Input Setup to falling edge of BIT_CLK	t_{setup}	10	-	-	ns
Input Hold from falling edge of BIT_CLK	t_{hold}	10	-	-	ns
Note: Timing is for SDATA and SYNC outputs with respect to BIT_CLK at the device driving the output.					

Parameter	Symbol	Minimum	Typical	Maximum	Units
BIT_CLK combined rise or fall plus flight time		-	-	7	ns
SDATA combined rise or fall plus flight time		-	-	7	ns
Note: Combined rise or fall plus flight times are provided for worst case scenario modeling purposes.					

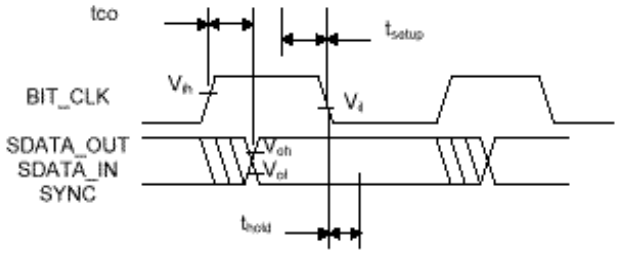

Data Output and Input timing diagram

7.2.5 Signal Rise and Fall Timing

Parameter	Symbol	Minimum	Typical	Maximum	Units
BIT_CLK rise time	$Trise_{clk}$	-	-	6	ns
BIT_CLK fall time	$Tfall_{clk}$	-	-	6	ns
SYNC rise time	$Trise_{sync}$	-	-	6	ns
SYNC fall time	$Tfall_{sync}$	-	-	6	ns
SDATA_IN rise time	$Trise_{din}$	-	-	6	ns
SDATA_IN fall time	$Tfall_{din}$	-	-	6	ns
SDATA_OUT rise time	$Trise_{dout}$	-	-	6	ns
SDATA_OUT fall time	$Tfall_{dout}$	-	-	6	ns
Note 1: 75pF external load (50 pF in AC'97 rev2.1) Note 2: rise is from 10% to 90% of Vdd (V_{ol} to V_{oh}) Note 3: fall is from 90% to 10% of Vdd (V_{oh} to V_{ol})					

Tel: +49(0)234-9351135 · Fax: +49(0)234-9351137 EMAIL: info@cornelius-consult.de http://www.cornelius-consult.de

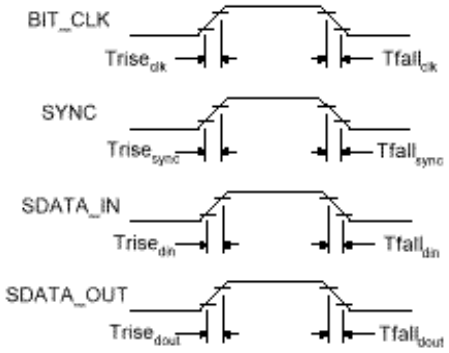

Signal Rise and Fall timing diagram

7.2.6 AC-Link Low Power Mode Timing

Parameter	Symbol	Minimum	Typical	Maximum	Units
End of slot 2 to BIT_CLK, SDATA_IN low	T_{s2_pdown}	-	-	1.0	µs

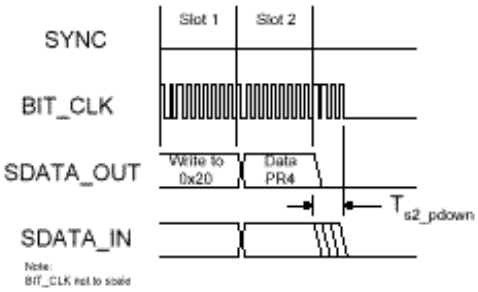

AC-Link low power mode timing diagram

7.2.7 ATE Test Mode

To meet AC'97 rev2.3 specifications, EAPD, SPDIFO, BIT_CLK and SDATA_IN should be floating in test mode.

Parameter	Symbol	Minimum	Typical	Maximum	Units
Setup to trailing edge of RESET# (also applies to SYNC)	$T_{setup2rst}$	15.0	-	-	ns
Rising edge of RESET# to Hi-Z delay	T_{off}	-	-	25.0	ns

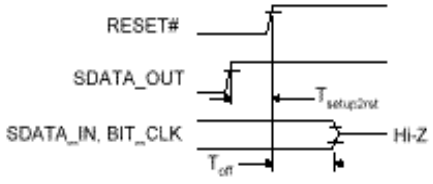

ATE test mode timing diagram

7.2.8 AC-Link IO Pin Capacitance and Loading

Output Pin	1 CODEC	2 CODEC	3 CODEC	4 CODEC
BIT_CLK (must support ≥ 2 CODECs)	55pF	62.5pF	75pF	85pF

Tel: +49(0)234-9351135 · Fax: +49(0)234-9351137 EMAIL: info@cornelius-consult.de http://www.cornelius-consult.de

SDATA_IN	47.5pF	55pF	60pF	62.5pF

7.2.9 SPDIF Output

SPDIF_OUT	Minimum	Typical	Maximum	Units
Rise time/fall time	0		10	%
Duty cycle	45		55	%

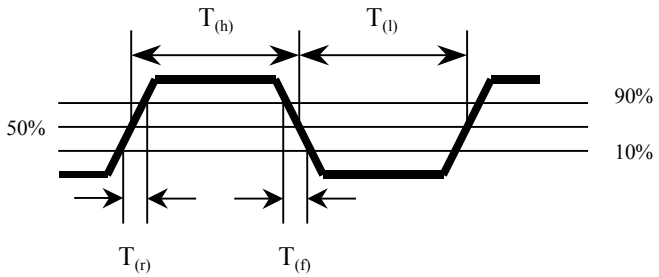

Notes: Rise time = 100 * $T_{(r)}$/ ($T_{(l)}$+ $T_{(h)}$)%
Fall time = 100 * $T_{(f)}$/ ($T_{(l)}$+ $T_{(h)}$)%
Duty cycle = 100 * $T_{(h)}$/ ($T_{(l)}$+ $T_{(h)}$)%

Tel: +49(0)234-9351135 · Fax: +49(0)234-9351137 EMAIL: info@cornelius-consult.de http://www.cornelius-consult.de

8. Analog Performance Characteristics

Standard test conditions: $T_{ambient}$=25^{0}C, Dvdd=3.3V ±5%,Avdd=5.0V±5%
1KHz input sine wave; Sampling frequency=48KHz; 0dB=1Vrms
10KΩ/50pF load; Test bench Characterization BW: 10Hz~22KHz
0dB attenuation; tone and 3D disabled

Parameter	Minimum	Typical	Maximum	Units
Full scale input voltage: Line inputs (Mixers)	-	1.6	-	
Line inputs (A/D)	-	1.0	-	Vrms
Mic input (0 dB)	-	1.6	-	
Mic input (20 dB boost)	-	0.16	-	
Full scale output voltage				
LINE-OUT	-	1.25	-	Vrms
HP-OUT	-	1.25	-	Vrms
Analog to Analog S/N: CD to LINE-OUT	-	100	-	dB
Other to LINE-OUT	-	100	-	
Analog frequency response	10	-	22,000	Hz
S/N (A-weighted): D/A	-	100	-	dB
A/D	-	92	-	
Total Harmonic Distortion: D/A	-	-92	-	dB
A/D	-	-86	-	
D/A & A/D frequency response	20	-	20,000	Hz
Transition Band	20,000	-	28,800	Hz
Stop Band	28,800	-	∞	Hz
Stop Band Rejection	-75	-	-	dB
Out-of-Band Rejection	-	-70	-	dB
Group delay	-	-	1	ms
Power Supply Rejection	-	-40	-	dB
MIC Boost Gain	6	20	30	dB
Master Volume (LINE- / HP-OUT): 64 step				
Step Size	-	1.5	-	dB
Attenuation Control Range	0	-	-94.5	dB
Master Volume (MONO-OUT): 32 step				
Step Size	-	1.5	-	dB
Attenuation Control Range	0	-	-46.5	dB
PC Beep Volume 16 steps:				
Step Size	-	3.0	-	dB
Attenuation Control Range	0	-	-45	dB
Analog Mixer Volume 32 steps:				
Step Size	-	1.5	-	dB
Gain Control Range	-34.5	-	+12	dB
Record Gain 16 steps:				
Step Size	-	1.5	-	dB
Gain Control Range	0	-	+22.5	dB
DC Volume Control: 32 step				
Gain Control Range	0	-	-43	dB
0 dB DC voltage	-	-	0.1	V
Mute DC voltage	4.7	-	-	V
Input impedance (gain = 0dB, mixer = off)				
LINE-IN, CD-IN, AUX-IN, MIC1 / MIC2	-	64	-	KΩ
PCBEEP, PHONE	-	16	-	KΩ

cont…

Tel: +49(0)234-9351135 · Fax: +49(0)234-9351137 EMAIL: info@cornelius-consult.de http://www.cornelius-consult.de

Output Impedance LINE-OUT HP-OUT MONO-OUT	 - - -	 200 5 500	 - - -	 Ω Ω Ω
Amplifier Maximum Output Power @20Ω load	-	-	50	mW
Power Supply Current VA=5.0V VA=3.3V VD=3.3V	 - - -	 50 36 26	 - - -	 mA mA mA
Power Down Current VA=5.0V / 3.3V VD=3.3V	 - -	 - -	 1000 700	 uA uA
Vrefout/Vrefout2/Vrefout3	-	2.50	4.0	V
Vrefout Drive Current	-	5	-	mA

Tel: +49(0)234-9351135 · Fax: +49(0)234-9351137 EMAIL: info@cornelius-consult.de http://www.cornelius-consult.de

9. Design Suggestions

9.1 Clocking

The clock source is decided by XTLSEL latched from pin-46 after **power-on reset.** The clock source of different configuration is listed below:

Configuration	**Operation & ID0**		
Pin-46(XTLSEL)	**ID0**	**BIT-CLK**	**Clock source**
NC	0 (Primary)	Output 12.288MHz	Crystal or ext. 24.576MHz is attached at XTL-IN
Low	0 (Primary)	Output 12.288MHz	Crystal or ext. 14.318MHz is attached at XTL-IN
NC	0 (Primary)	Input	*12.288M input at BIT-CLK*❶

*Low: Pulled low by a 0 ohm resistor. NC: Not connect or pulled high.
*Pin-46is internally pulled high by a weak resistor.

❶According to AC'97 ver 2.3, the primary mode while RESET# is asserted, if a clock is present at BIT-CLK pin for at least 5 cycles before RESET# is de-asserted, ALC250 is a consumer of BITCLK. ALC250 should use external 12.288MHz BITCLK as its clock source.

9.2 AC-Link

When the ALC250 receives serial data from the AC97 controller, it samples SDATA_OUT on the falling edge of BIT_CLK. When the ALC250 sends serial data to the AC97 controller, it starts to drive SDATA_IN on the rising edge of BIT_CLK.

The ALC250 will return any uninstalled bits or registers with 0 for read operations. The ALC250 also stuffs the unimplemented slot or bit with 0 in SDATA_IN. Note that AC-LINK is MSB-justified.

Refer to "Audio CODEC '97 Component Specification Revision 2.3." for details.

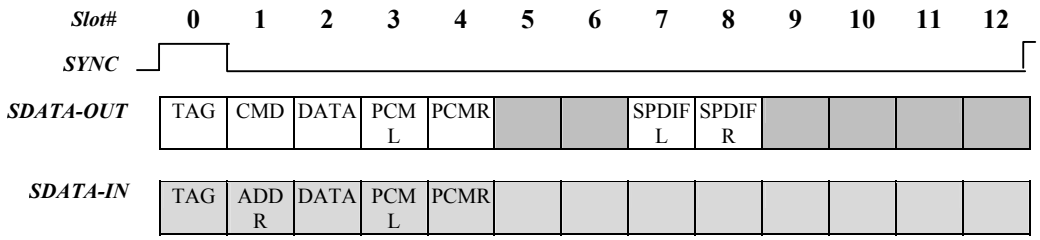

Default ALC250 Slot Arrangement – CODEC ID = 00 **(ALC250 supports only primary mode)**

9.3 Reset

There are 3 types of reset operations: Cold, Warm and Register.

Reset Type	Trigger condition	CODEC response
Cold	Assert RESET# for a specified period	Reset all hardware logic and all registers to its default value.
Register	Write register indexed 00h	Reset all registers to its default value.
Warm	Driven SYNC high for specified period without BIT_CLK	Reactivates AC-LINK, no change to register values.

The AC97 controller should drive SYNC and SDATA_OUT low during the period of RESET# assertion to guarantee that the ALC250 has reset successfully.

Tel: +49(0)234-9351135 · Fax: +49(0)234-9351137 EMAIL: info@cornelius-consult.de http://www.cornelius-consult.de

9.4 CD Input

It is important to pay attention to differential CD input. Below is an example of differential CD input.

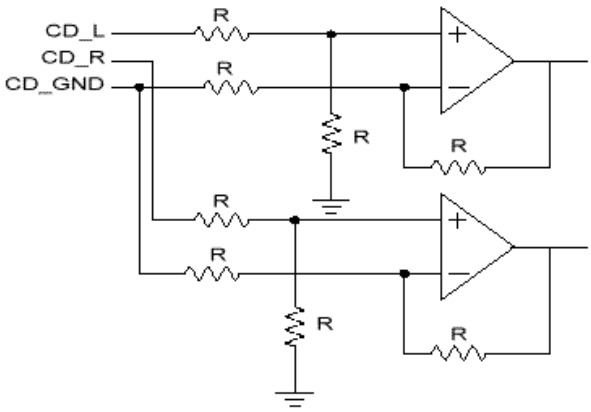

Example of differential CD input

9.5 Odd Addressed Register Access

The ALC250 will return “0000h” when odd-addressed and unimplemented registers are read.

9.6 Power-down Mode

It is important to pay special attention to the power down control register (index 26h), especially PR4 (powerdown AC-link).

9.7 Test Mode

To provide compatibility with AC’97 rev2.2, the ALC250 will float its digital output pins in both ATE and Vendor-Specific test modes. Please refer to AC’97 rev2.2 section 9.2 for a detailed description of the test modes.

9.7.1 ATE In Circuit Test Mode

SDATA_OUT is sampled high at the trailing edge of RESET#. In this mode, the ALC250 will drive BIT_CLK, SDATA_IN, EAPD and SPDIFO to high impedance.

9.7.2 Vendor Specific Test Mode

The Vendor Specific Test mode is no longer supported.

Tel: +49(0)234-9351135 · Fax: +49(0)234-9351137 EMAIL: info@cornelius-consult.de http://www.cornelius-consult.de

9.8 DC Voltage Volume Control

The ALC250 has a 32-step internal volume control that is controlled by the DC voltage applied the 'DC Vol' pin (pin-32). The volume control input range is from GND to AVDD, to attenuate the master volume (real MX02), headphone volume (real MX04) and mono-out volume (real MX06). A higher DC voltage means more attenuation related to output volume. The table below shows the relation between input DC voltage and the 5-bit volume code.

Input DC Voltage	Volume Code	Note	Input DC Voltage	Volume Code	Note
95%=< DC	1F	**DCMute=1**	47%< DC <= 50%	F	
92%< DC <= 95%	1E	DCMute=0	44%< DC <= 47%	E	
89%< DC <= 92%	1D		41%< DC <= 44%	D	
86%< DC <= 89%	1C		38%< DC <= 41%	C	
83%< DC <= 86%	1B		35%< DC <= 38%	B	
80%< DC <= 83%	1A		32%< DC <= 35%	A	
77%< DC <= 80%	19		29%< DC <= 32%	9	
74%< DC <= 77%	18		26%< DC <= 29%	8	
71%< DC <= 74%	17		23%< DC <= 26%	7	
68%< DC <= 71%	16		20%< DC <= 23%	6	
65%< DC <= 68%	15		17%< DC <= 20%	5	
62%< DC <= 65%	14		14%< DC <= 17%	4	
59%< DC <= 62%	13		11%< DC <= 14%	3	
56%< DC <= 59%	12		8%< DC <= 11%	2	
53%< DC <= 56%	11		5%< DC <= 8%	1	
50%< DC <= 53%	10		DC <= 5%	0	DCMute=0

Input DC Voltage is ratio of AVDD (+5VA).

❷This 5-bit volume code adds extra attenuation for master volume and headphone volume, the absolute maximum volume is determined by MX02, MX04 and MX06.
Once the sum of MX value and volume code exceeds 3Fh, the real MX value is 3Fh.
Example 1: (Normal case)
MX02=0002h, MX04=0300h, MX06=0001h, Volume Code=2h,
then Master Volume=0204h, Headphone Volume=0502h, Mono-Out=0003h

Example 2: (The sum exceeds 3Fh for MX02/MX04, 1Fh for MX06)
MX02=2F2Fh, MX04=2E2Eh, MX06=0002h, Volume Code=1Eh,
then Master Volume=3F3Fh, real Headphone Volume=3D3Dh, Mono-Out=001Fh

Example 3: (Volume code is 1Fh, DCMute=1, real MXs should be muted)
MX02=0000h, MX04=2020h, MX06=0010h, Volume Code=1Fh,
then Master Volume=9F1Fh, Headphone Volume=BF3Fh, Mono-Out=801Fh

Tel: +49(0)234-9351135 · Fax: +49(0)234-9351137 EMAIL: info@cornelius-consult.de http://www.cornelius-consult.de

9.9 POWER OFF CD Function

The 'POWER OFF CD' function describes a state which, after the system has been shut down and a +5V analog power is supplied at VAUX(pin-34), the ALC250 will turn on the CD-IN op and output amplifier. It is possible to design a system which will save op-amp circuitry and bypass CD output directly to the speaker.

The figure below indicates the system application circuitry to support the 'POWER OFF CD' function. The operation mode is defined by +3.3VCC and +5Vaux.

+3.3VCC	+5Vaux	Operation Mode
No (0)	No (0)	Shut Down
No (0)	Yes (1)	Power Off CD
Yes (1)	No (0)	Normal (+5Vaudio must be on)
Yes (1)	Yes (1)	Normal (+5Vaudio must be on)

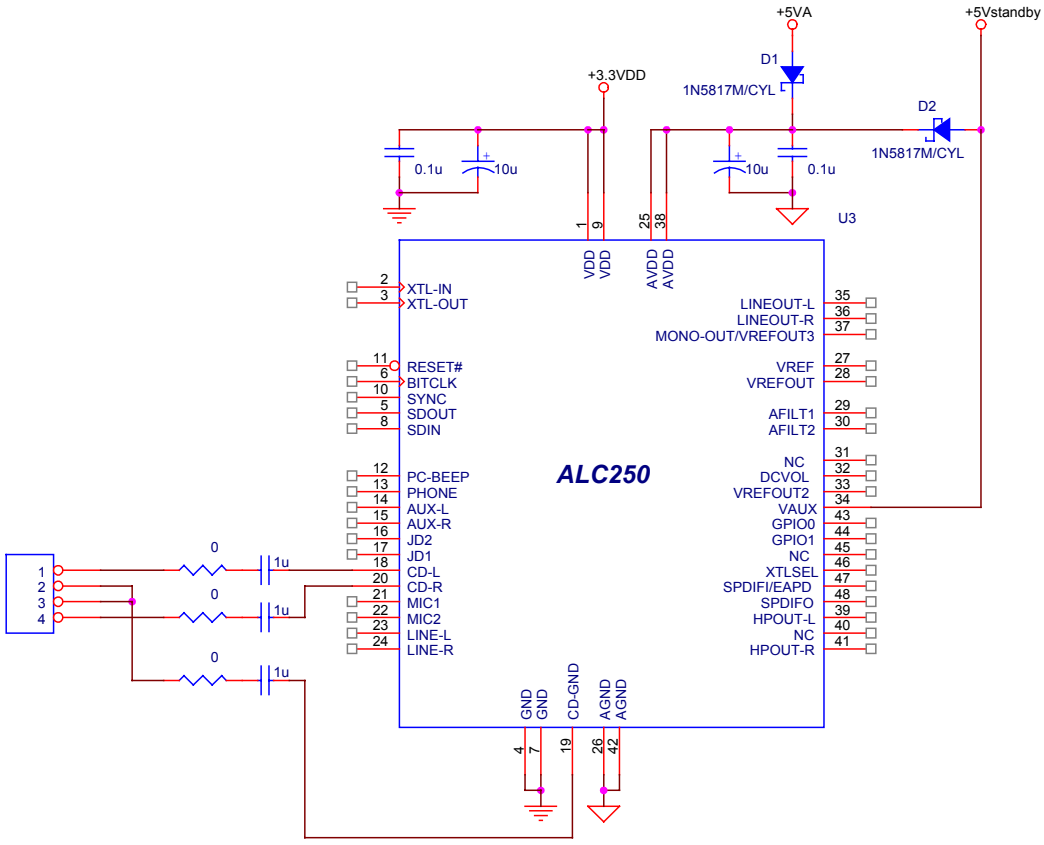

POWER OFF CD Circuitry

Tel: +49(0)234-9351135 · Fax: +49(0)234-9351137 EMAIL: info@cornelius-consult.de http://www.cornelius-consult.de

10. Application Circuit

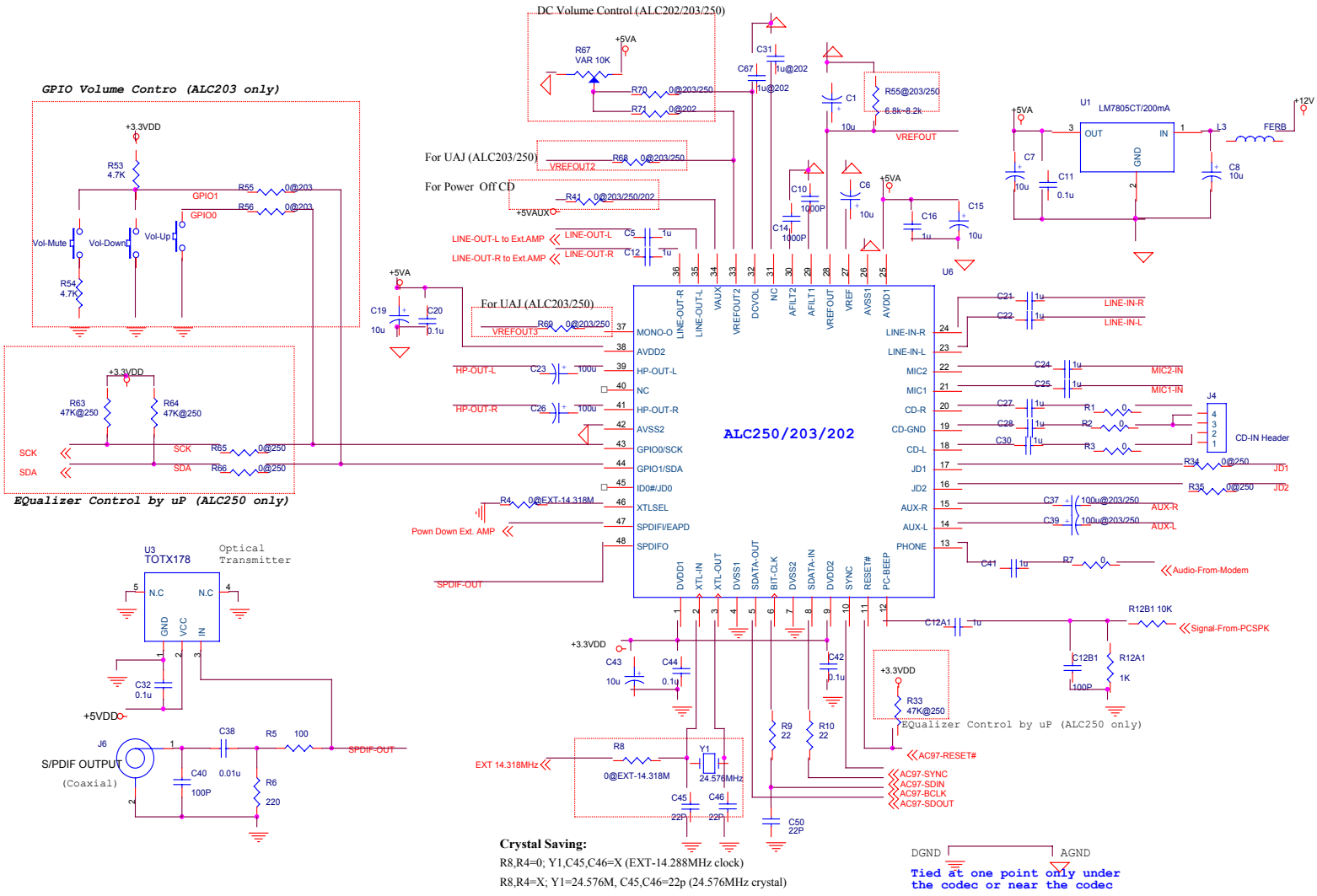

Filter Connection Schematic

Tel: +49(0)234-9351135 · Fax: +49(0)234-9351137 EMAIL: info@cornelius-consult.de http://www.cornelius-consult.de

Standard Jack Connection (ALC250/203/202)

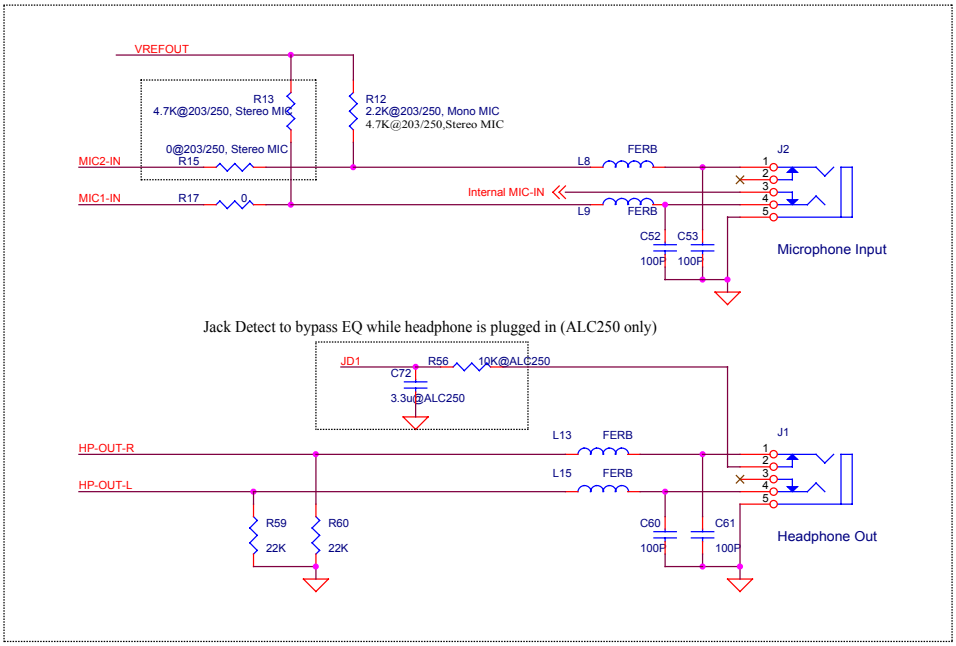

Jack Connection - Standard Connection

Universal Audio Jack(UAJ): (ALC250/203)

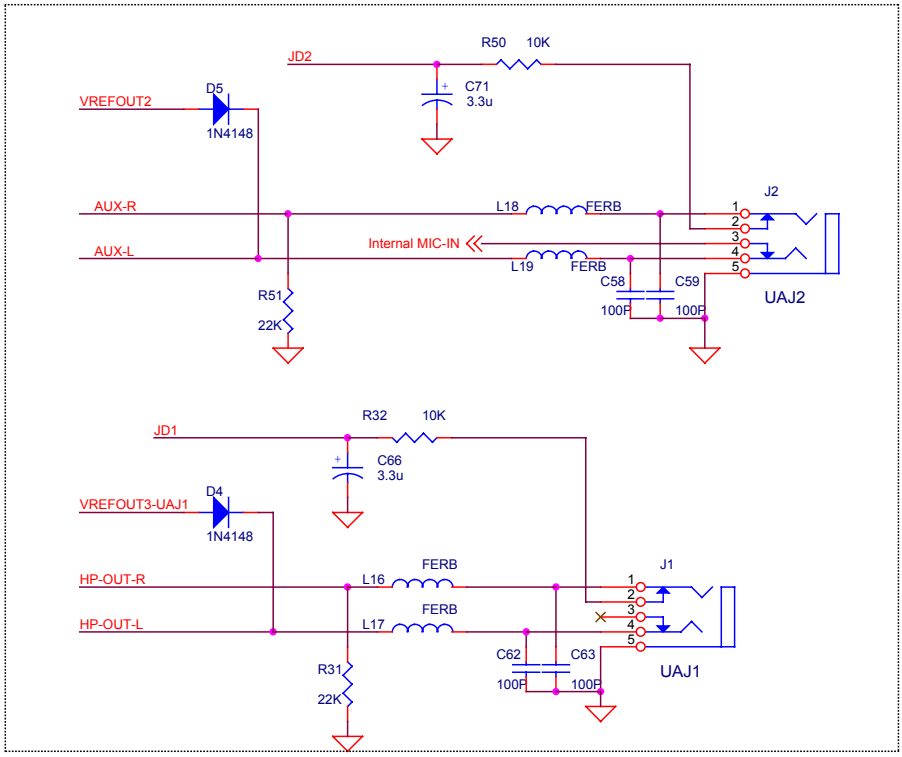

Jack Connection -(Universal Audio Jack, UAJ)

Tel: +49(0)234-9351135 · Fax: +49(0)234-9351137 EMAIL: info@cornelius-consult.de http://www.cornelius-consult.de

11. Mechanical Dimensions

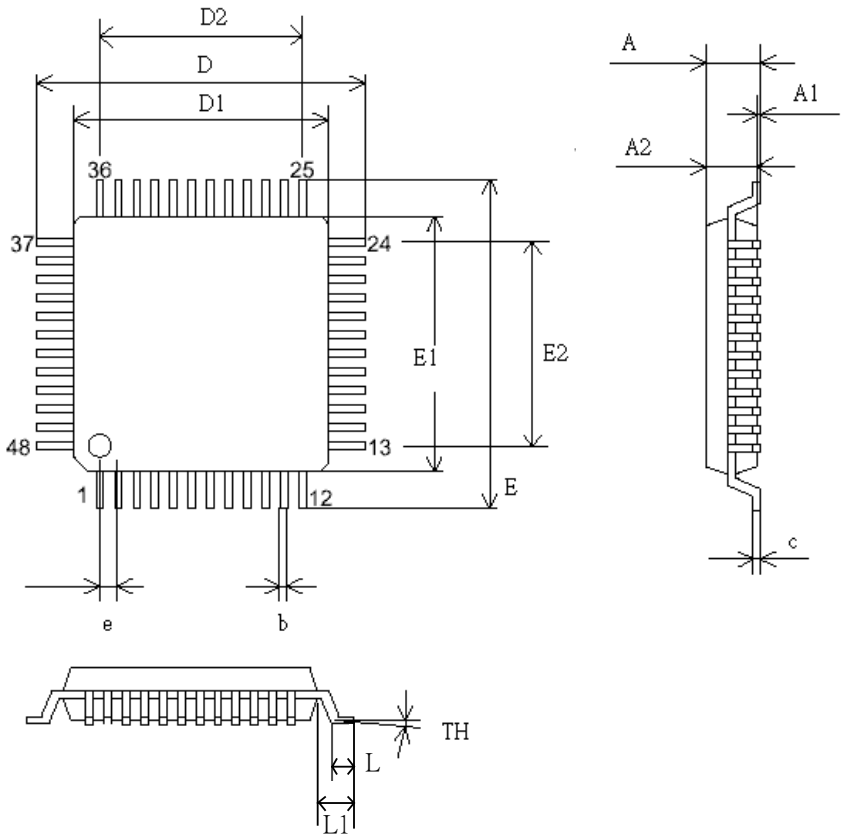

SYMBOL	MILLIMETER			INCH		
	MIN.	TYPICAL	MAX.	MIN.	TYPICAL	MAX
A			1.60			0.063
A1	0.05		0.15	0.002		0.006
A2	1.35	1.40	1.45	0.053	0.055	0.057
c	0.09		0.20	0.004		0.008
D	9.00 BSC			0.354 BSC		
D1	7.00 BSC			0.276 BSC		
D2	5.50			0.217		
E	9.00 BSC			0.354 BSC		
E1	7.00BSC			0.276 BSC		
E2	5.50			0.217		
b	0.17	0.20	0.27	0.007	0.008	0.011
e	0.50 BSC			0.016 BSC		
TH	0°	3.5°	7°	0°	3.5°	7°
L	0.45	0.60	0.75	0.018	0.0236	0.030
L1		1.00			0.0393	

TITLE: LQFP-48 (7.0x7.0x1.6mm) PACKAGE OUTLINE DRAWING, FOOTPRINT 2.0mm		
LEADFRAME MATERIAL		
APPROVE	DOC. NO.	
	VERSION	02
CHECK	DWG NO.	PKGC-065
	DATE	
REALTEK SEMICONDUCTOR CORP.		

Tel: +49(0)234-9351135 · Fax: +49(0)234-9351137 EMAIL: info@cornelius-consult.de http://www.cornelius-consult.de

Realtek Semiconductor Corp.
Headquarters
1F, No. 2, Industry East Road IX, Science-based
Industrial Park, Hsinchu, 300, Taiwan, R.O.C.
Tel : 886-3-5780211 Fax : 886-3-5776047
WWW: www.realtek.com.tw

Tel: +49(0)234-9351135 · Fax: +49(0)234-9351137 EMAIL: info@cornelius-consult.de http://www.cornelius-consult.de